www.baeder-automotive.com

# AF BAEDER

## AN EXCELLENT PARTNER FOR THE FUTURE

SEPTEMBER 2022

Ing. A.F. Baeder Ges.m.b.H. • Kolpingstraße 13 • 1230 Vienna
sales@baeder-automotive.com • Tel: +43 (0)1/865 16 40 • Fax: +43 (0)1/865 16 40 - 34

# 12V components DC

| | |
|---|---|
| **31 6909 007** | Flatpoint II white 1,0m DC 12V |
| **31 6909 067** | Flatpoint II white 1,0m DC 12V/24V |

| | |
|---|---|
| **31 6709 007** | Monopoint 12V/24V |

| | |
|---|---|
| **31 2309 027** | Flatpoint II SML 0,5m DC 12V |
| **31 2309 087** | Flatpoint II SML 0,5m DC 12V/24V |

| | |
|---|---|
| **31 2369 047** | Flatpoint II SML 0,5m DC 12V with angle bracket |

| | |
|---|---|
| **15 5321 107** | Angle bracket up front |
| **15 5321 207** | Angle bracket backwards |
| **15 5111 007** | Foam pad |

| | |
|---|---|
| **31 6409 007** | Flatpoint II red 0,5m DC 12V |

| | |
|---|---|
| **31 7209 007** | Posipoint II red 0,5m DC 12V/24V |
| **15 5609 107** | Housing for Posipoint II |

| | |
|---|---|
| **31 3309 007** | Superpoint III left 1,0m DC 12V |
| **31 3309 017** | Superpoint III right 1,0m DC 12V |

| | |
|---|---|
| **31 3309 027** | Superpoint III short 1,0m DC 12V |

| | |
|---|---|
| **31 3309 037** | Superpoint III direct 1,0m DC 12V |

| | |
|---|---|
| **31 3309 047** | Superpoint III pendulum right 1,0m DC 12V |
| **31 3309 057** | Superpoint III pendulum left 1,0m DC 12V |

www.baeder-automotive.com

**Ing. A.F. Baeder Ges.m.b.H.**
1230 Vienna, Kolpingstraße 13
Tel.: +43 (0)1 865 16 40 Fax.: +43 (0)1 865 16 40 - 34
E-Mail: sales@baeder-automotive.com

Printing errors, technical changes and image changes reserved © Ing. A.F. Baeder Ges.m.b.H.

| | | |
|---|---|---|
| **31 3109 007** | Superpoint IV right | DC 12V/24V |
| **31 3109 017** | Superpoint IV left | DC 12V/24V |

| | | |
|---|---|---|
| **31 3109 067** | Superpoint IV direct right | DC 12V/24V |
| **31 3109 077** | Superpoint IV direct left | DC 12V/24V |

| | | |
|---|---|---|
| **31 3109 087** | Superpoint IV pendulum right | DC 12V/24V |
| **31 3109 097** | Superpoint IV pendulum left | DC 12V/24V |

| | | |
|---|---|---|
| **31 3109 107** | Superpoint IV short right | DC 12V/24V |
| **31 3109 117** | Superpoint IV short left | DC 12V/24V |

| | | |
|---|---|---|
| **36 3769 007** | Number plate holder LED 0,8m DC 12V/24V | |

| | | |
|---|---|---|
| **36 3809 007** | Number plate lamp LED | DC 12V/24V |

| | | |
|---|---|---|
| **36 3869 007** | Number plate lamp single mount LED DC 12V/24V | |

| | | |
|---|---|---|
| **31 8920 007** | 3rd brake light Linepoint I LED 0,5m Open End 12V/24V | |

| | | |
|---|---|---|
| **15 5974 007** | Rubber sleeve for DC cables | |

| | | |
|---|---|---|
| **15 5976 017** | DC Connector | |

| | | |
|---|---|---|
| **17 7200 077** | 200m DC flat cable | |

| | | |
|---|---|---|
| **68 5500 047** | DC-connector cable 7m overmoulded | |

| | | |
|---|---|---|
| **10W 100 537** | Closing pliers DC | |

www.baeder-automotive.com

**Ing. A.F. Baeder Ges.m.b.H.**
1230 Vienna, Kolpingstraße 13
Tel.: +43 (0)1 865 16 40 Fax.: +43 (0)1 865 16 40 - 34
E-Mail: sales@baeder-automotive.com

Printing errors, technical changes and image changes reserved © Ing. A.F. Baeder Ges.m.b.H.

# 24V components P&R

| | |
|---|---|
| **31 2304 017** | Flatpoint I 0,5m P&R 24V |
| **31 2304 097** | Flatpoint I 0,5m P&R 12/24V |

| | |
|---|---|
| **31 2364 087** | Flatpoint I 0,5m P&R 24V |

| | |
|---|---|
| **31 6904 017** | Flatpoint II white 0,5m P&R 24V |
| **31 6904 167** | Flatpoint II white 0,5m P&R 12V/24V |

| | |
|---|---|
| **31 6404 017** | Flatpoint II red 0,5m P&R 24V |

| | |
|---|---|
| **15 5321 107** | Angle bracket up front |
| **15 5321 207** | Angle bracket backwards |
| **15 5111 007** | Foam pad |

| | |
|---|---|
| **31 7104 007** | Posipoint II white 0,5m P&R 12V/24V |

| | |
|---|---|
| **31 7204 007** | Posipoint II red 0,5m P&R 12V/24V |
| **31 7204 027** | Posipoint II red 3,5m P&R 12V/24V |

| | |
|---|---|
| **15 5609 107** | Body for Posipoint II 24V |

| | |
|---|---|
| **31 6704 067** | Monopoint II white 0,5m P&R 24V |

| | |
|---|---|
| **31 6804 087** | Monopoint II red 0,5m P&R 24V |

www.baeder-automotive.com

**Ing. A.F. Baeder Ges.m.b.H.**
1230 Vienna, Kolpingstraße 13
Tel.: +43 (0)1 865 16 40 Fax.: +43 (0)1 865 16 40 - 34
E-Mail: sales@baeder-automotive.com

Printing errors, technical changes and image changes reserved © Ing. A.F. Baeder Ges.m.b.H.

| | | |
|---|---|---|
| **31 3304 047** | Superpoint III right 1,25m | P&R 24V |
| **31 3304 057** | Superpoint III left 1,25m | P&R 24V |
| **31 3364 007** | Superpoint III direct 1,5m | P&R 24V |
| **31 3304 097** | Superpoint III short 1,25m | P&R 24V |
| **31 3364 027** | Superpoint III pendulum right 1,5m | P&R 24V |
| **31 3364 057** | Superpoint III pendulum left 1,5m | P&R 24V |
| **31 3104 007** | Superpoint IV left 2,0m | P&R 12V/24V |
| **31 3104 017** | Superpoint IV right 2,0m | P&R 12V/24V |
| **31 3104 067** | Superpoint IV direct right 2,0m | P&R 12V/24V |
| **31 3104 077** | Superpoint IV direct left 2,0m | P&R 12V/24V |
| **31 3104 047** | Superpoint IV short right 2,0m | P&R 12V/24V |
| **31 3104 057** | Superpoint IV short left 2,0m | P&R 12V/24V |
| **31 3104 087** | Superpoint IV pendulum right 2,0m | P&R 12V/24V |
| **31 3104 097** | Superpoint IV pendulum left 2,0m | P&R 12V/24V |
| **15 5729 014** | End cap P&R | |
| **15 5971 007** | Closing cap P&R | |
| **17 7225 127** | 200m P&R flat cable | |
| **10W 100 517** | Closing pliers P&R | |

www.baeder-automotive.com

**Ing. A.F. Baeder Ges.m.b.H.**
1230 Vienna, Kolpingstraße 13
Tel.: +43 (0)1 865 16 40 Fax.: +43 (0)1 865 16 40 - 34
E-Mail: sales@baeder-automotive.com


Printing errors, technical changes and image changes reserved © Ing. A.F. Baeder Ges.m.b.H.

# Rear and 3-function lights

| LINEPOINT I LED | | |
|---|---|---|
| Indicator - stop - tail lamp | 0,5m open end | 33 8914 007 |
| | 5m open end | 33 8914 017 |
| | 0,5m 5pin bayonet | 33 8914 507 |
| Reverse lamp | 0,5m open end | 38 9220 007 |
| Fog lamp | 0,5m open end | 37 9220 007 |
| 3rd stop lamp | 0,5m open end | 31 8920 007 |
| Tail - stop lamp | 0,5m open end | 31 9220 007 |
| Indicator | 0,5m open end | 31 9221 007 |
| Dynamic Indicator | 0,5m open end | 31 9514 007 |

| POSIPOINT IV | | |
|---|---|---|
| Indicator - stop - tail lamp | 0,5m open end | 33 7344 017 |
| | 0,5m 5pol. bayonet | 33 7344 027 |
| | 0,5m 4pol. Deutsch connector | 33 7344 047 |
| Fog - reverse lamp | 0,5m open end | 32 7344 017 |
| Position - flash lamp | 0,1m 5pol. Lear connector | 32 7344 027 |

| MINIFAB | | |
|---|---|---|
| Indicator - stop - tail lamp | 0,5m open end | 41 2030 001 |
| Fog - reverse lamp | 0,5m open end | 41 2031 001 |
| Reverse lamp | 0,5m open end | 41 2033 001 |
| Fog lamp | 0,5m open end | 41 2032 001 |

| MULTILED III TRUCK VERSION | | |
|---|---|---|
| Right | 7pin AMP | 24 8930 077 |
| | Tail light 7pin AMP + 2pin ASS2 | 24 8930 087 |
| Links | 7pol. AMP | 24 8931 077 |
| | Tail light 7pin AMP + 2pin ASS2 | 24 8931 087 |

www.baeder-automotive.com

**Ing. A.F. Baeder Ges.m.b.H.**
1230 Vienna, Kolpingstraße 13
Phone: +43 (0)1 865 16 40 Fax.: +43 (0)1 865 16 40 - 34
E-Mail: sales@baeder-automotive.com

Printing errors, technical changes and image changes reserved. © Ing. A.F. Baeder Ges.m.b.H.

| MIDILED I MAX | | |
|---|---|---|
| *Dynamic Indicator* | *left/right 0,5m open end* | **35 2020 001** |
| | *left/right 0,5m AMP* | **35 2020 031** |
| | *right 0,5m 7pin ASS2* | **35 2020 011** |
| | *right 0,5m 7pin ASS2* | **35 2020 017** |
| | *left 0,5m 7pin ASS2* | **35 2020 021** |
| | *left 0,5m 7pin ASS2* | **35 2020 027** |
| *Standard indicator* | *left/right 0,5m open end* | **35 2021 001** |
| | *left/right 0,5m AMP* | **35 2021 031** |
| | *right 0,5m 7pin ASS2* | **35 2021 011** |
| | *left 0,5m 7pin ASS2* | **35 2021 021** |

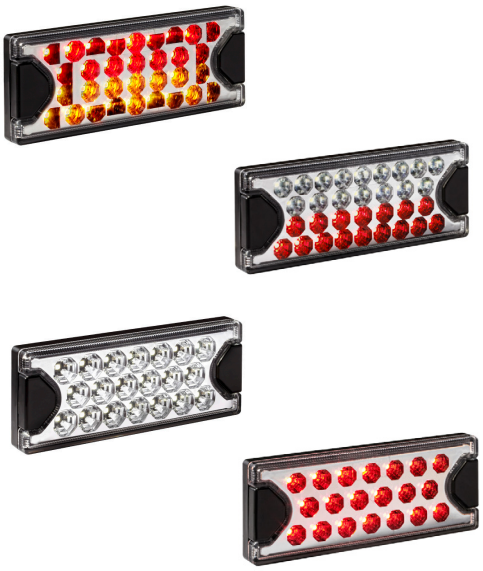

| MINILED II | | |
|---|---|---|
| *Indicator - stop - tail lamp* | *0,5m open end* | **33 7200 007** |
| | *0,5m 5pin bayonet* | **33 7200 507** |
| | *left 0,5m 7pin ASS2 + 3pin ASS3* | **33 7207 047** |
| | *right 0,5m 7pin ASS2 + 3pin ASS3* | **33 7207 057** |
| | *left/right 0,5m 5pin bayonet / 0,25m 3pin ASS3* | **33 7207 507** |
| *Fog - reverse lamp* | *0,5m 3pin ASS3* | **32 7207 007** |
| *Reverse lamp* | *0,5m 3pin ASS3* | **38 7207 007** |
| *Fog lamp* | *0,5m 3pin ASS3* | **37 7207 007** |

www.baeder-automotive.com

**Ing. A.F. Baeder Ges.m.b.H.**
1230 Vienna, Kolpingstraße 13
Phone: +43 (0)1 865 16 40 Fax.: +43 (0)1 865 16 40 - 34
E-Mail: sales@baeder-automotive.com

Printing errors, technical changes and image changes reserved. © Ing. A.F. Baeder Ges.m.b.H.

## H1

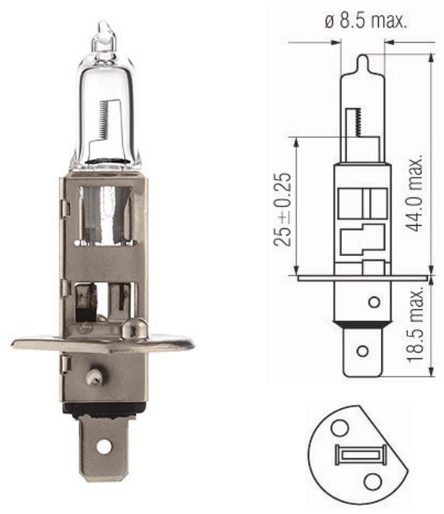


| VOLT | WATT | LL | HD | Item number |
|---|---|---|---|---|
| 12 | 55 | | | LA501203 |
| | 55 | ✓ | ✓ | LA501203LLHD |
| 24 | 70 | | | LA502403 |
| | 70 | ✓ | ✓ | LA502403LLHD |

## BA15S

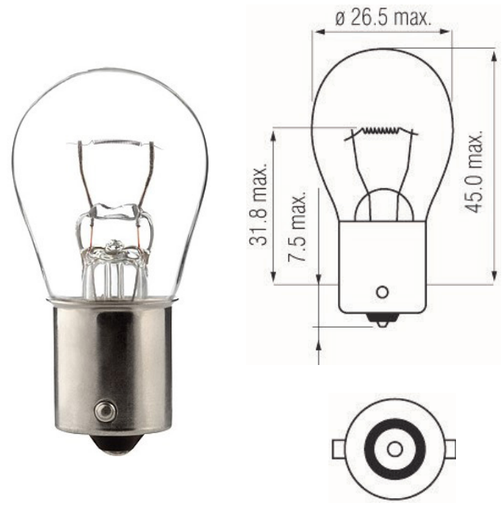


| VOLT | WATT | Item number |
|---|---|---|
| 12 | 21 | LA501210 |
| | 18 | LA501212 |
| 24 | 21 | LA502410 |

## SV8,5 10x36

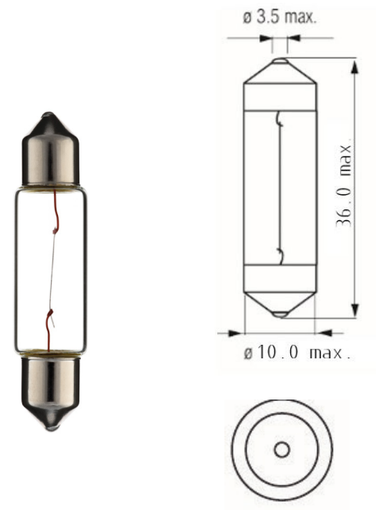


| VOLT | WATT | Item number |
|---|---|---|
| 12 | 5 | LA501221 |
| 24 | 5 | LA502421 |

## BA7s

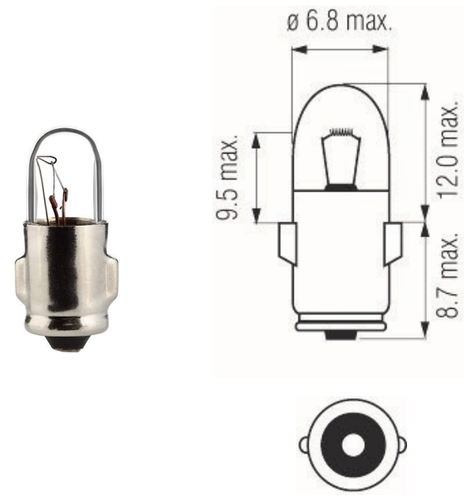


| VOLT | WATT | Item number |
|---|---|---|
| 12 | 2 | LA5012302 |

## H3

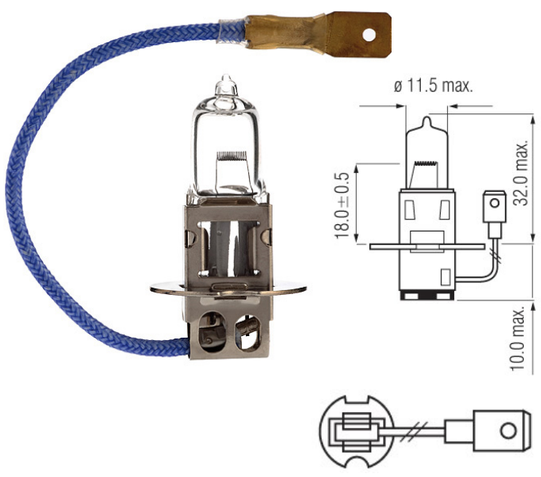


| VOLT | WATT | LL | HD | Item number |
|---|---|---|---|---|
| 12 | 55 | | | LA501205 |
| | 55 | ✓ | ✓ | LA501205LLHD |
| 24 | 70 | | | LA502405 |
| | 70 | ✓ | ✓ | LA502405LLHD |

## BA15s

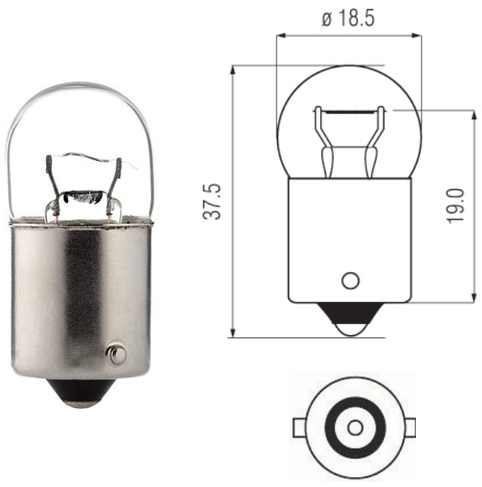


| VOLT | WATT | Item number |
|---|---|---|
| 12 | 5 | LA501215 |
| | 10 | LA501216 |
| 24 | 5 | LA502415 |
| | 10 | LA502416 |

## SV8,5 15x44

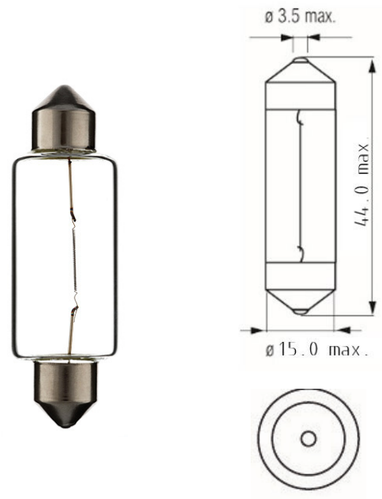


| VOLT | WATT | Item number |
|---|---|---|
| 24 | 18 | LA502424 |

## BA9s

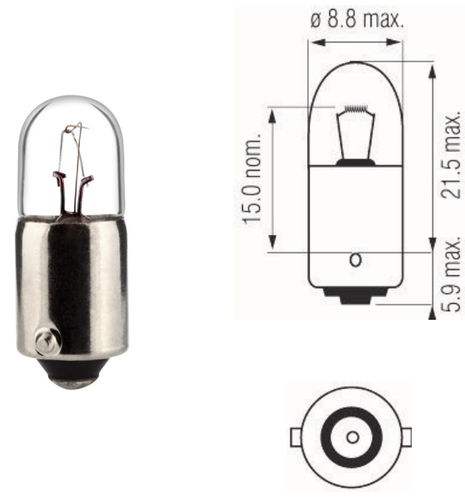


| VOLT | WATT | Item number |
|---|---|---|
| 12 | 4 | LA501232 |
| 24 | 4 | LA502432 |

## H4

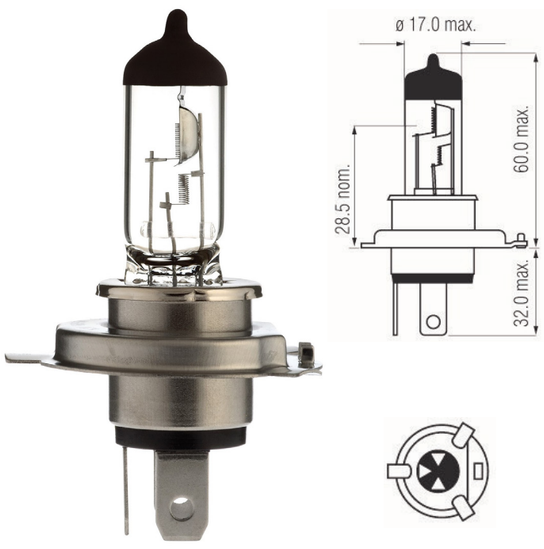


| VOLT | WATT | LL | HD | Item number |
|---|---|---|---|---|
| 12 | 60/55 | | | LA50120645 |
| | 60/55 | ✓ | ✓ | LA501206LLHD |
| 24 | 75/70 | ✓ | ✓ | LA502406LLHD |

## BAU15s

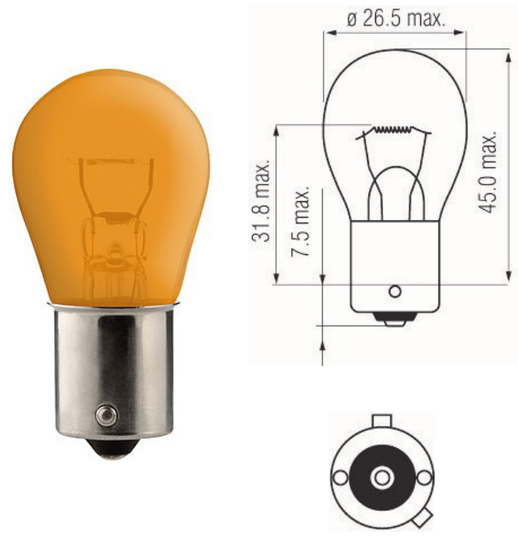


| VOLT | WATT | Item number |
|---|---|---|
| 12 | 21 | LA501292 |
| 24 | 21 | LA502492 |

## SV7 8X28

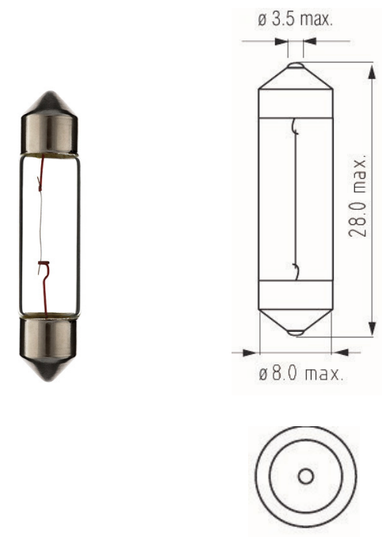


| VOLT | WATT | Item number |
|---|---|---|
| 12 | 3 | LA5012262 |

## T10

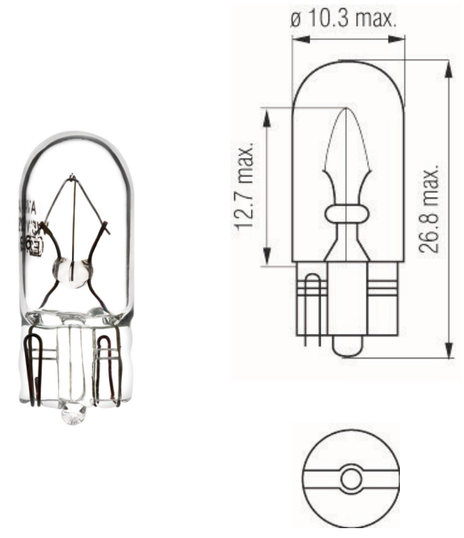


| VOLT | WATT | Item number |
|---|---|---|
| 12 | 5 | LA501236 |
| 24 | 5 | LA502436 |

## H7

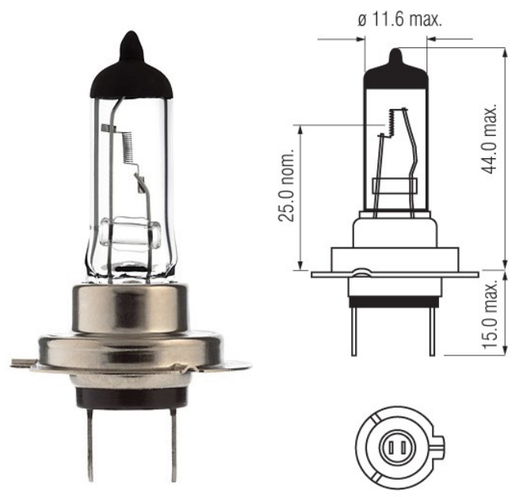


| VOLT | WATT | LL | HD | Item number |
|---|---|---|---|---|
| 12 | 55 | | | LA5012067K |
| | 55 | ✓ | ✓ | LA5012067KLLHD |
| 24 | 70 | | | LA5024067K |
| | 70 | ✓ | ✓ | LA5024067KLLHD |

## BAY15d

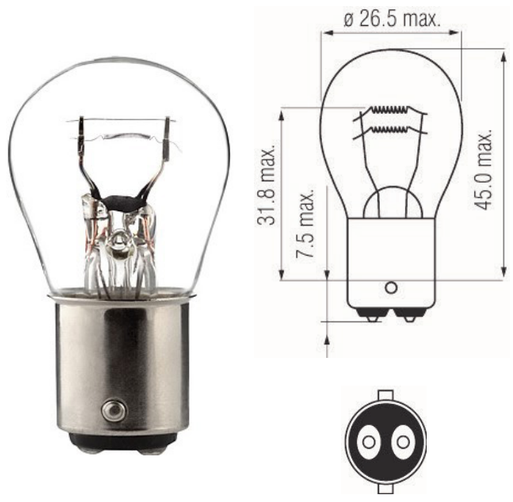


| VOLT | WATT | Item number |
|---|---|---|
| 12 | 21/5 | LA501214 |
| 24 | 21/5 | LA502414 |

## SV7 8x31

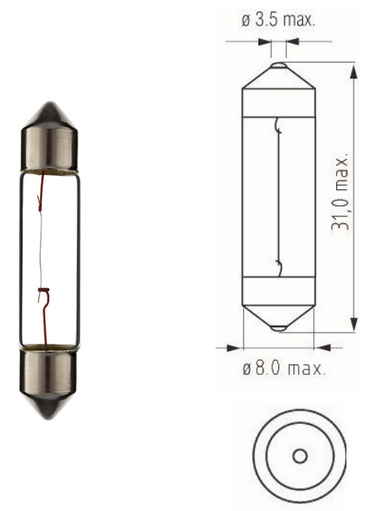


| VOLT | WATT | Item number |
|---|---|---|
| 24 | 5 | LA5024265 |

**Ing. A.F. Baeder Ges.m.b.H.**
Kolpingstrasse 13
A-1230 Vienna

Tel.: +43 (0)1 865 16 40
Fax.: +43 (0)1 865 16 40 - 34
sales@baeder-automotive.com

www.baeder-automotive.com

# Working & reversing lights

+ Rev. light

| 38 8524 017 |
|---|
| *Working lamp* |
| *1000 lumen* |
| *1,5m Open End* |
| *60° wide beams* |

+ Rev. light

| 38 8524 007 |
|---|
| *Working lamp* |
| *1500 lumen* |
| *1,5m Open End* |
| *60° wide beams* |

| 38 8221 107 |
|---|
| *Working lamp LED* |
| *3000 lumen* |
| *1,5m Open End* |
| *60° wide beams* |

+ Rev. light

| 42 1000 001 |
|---|
| *Working lamp 5 LED* |
| *1200 lumen* |
| *1,5m Open End* |
| *110 x 110 x 37 mm* |

| 42 1000 101 |
|---|
| *Working lamp 5 LED* |
| *1200 lumen* |
| *1,5m Open End* |
| *85 x 85 x 38 mm* |

+ Rev. light

| 42 1001 001 |
|---|
| *Working lamp 5 LED* |
| *2000 lumen* |
| *1,5m Open End* |
| *109 x 109 x 56 mm* |

+ Rev. light

| 42 1006 001 |
|---|
| *Working lamp 16 LED* |
| *1800 lumen* |
| *1,5m Open End* |
| *plastic housing* |

+ Rev. light

| 42 1008 001 |
|---|
| *Working lamp 4 LED* |
| *900 lumen* |
| *1,5m Open End* |

| 42 1008 301 |
|---|
| *Working lamp 2 LED* |
| *2000 lumen* |
| *1,5m Open End* |

| 42 1008 401 |
|---|
| *Working lamp 6 LED* |
| *1300 lumen* |
| *1,5m Open End* |

+ Rev. light

| 42 1009 001 |
|---|
| *Working lamp* ***with switch*** *10 LED* |
| *1000 lumen* |
| *1,5m Open End* |


https://www.baeder-automotive.com

**Ing. A.F. Baeder G.m.b.H.**
1230 Vienna, Kolpingstraße 13
Tel.: +43 (0)1 865 16 40 Fax.: +43 (0)1 865 16 40 - 34
E-Mail: sales@baeder-automotive.com



Printing errors, technical changes and image changes reserved © Ing. A.F. Baeder Ges.m.b.H.

# LED beacons & light bars

| RKL0001 |
|---|
| *Rotating beacon LED* |
| *12-24 Volt* |
| *3-point mounting* |

| RKL0002 |
|---|
| *Rotating beacon LED* |
| *12-24 Volt* |
| *Flexible DIN mount* |

| RKL0003 |
|---|
| *Rotating beacon LED* |
| *12-24 Volt* |
| *Magnetic mount* |

| 42 4404 051 |
|---|
| *Rotating beacon LED* |
| *12-24 Volt* |
| *3-point mounting* |
| *ECE R10+R65* |

| 42 4404 031 |
|---|
| *Rotating beacon LED* |
| *12-24 Volt* |
| *DIN flexible* |
| *ECE R10+R65* |

| 42 4404 071 |
|---|
| *Rotating beacon LED* |
| *12-24 Volt* |
| *Magnetic mount* |
| *ECE R10+R65* |

| LB0005 |
|---|
| *LED light bar* |
| *12-24 Volt* |
| *Magnetic mount* |

| LB0006 |
|---|
| *LED light bar* |
| *12-24 Volt* |
| *4-point mounting* |

| LB0006 |
|---|
| *LED light bar* |
| *1200 mm* |
| *ECE R10+R65* |


https://www.baeder-automotive.com

**Ing. A.F. Baeder G.m.b.H.**
1230 Vienna, Kolpingstraße 13
Tel.: +43 (0)1 865 16 40 Fax.: +43 (0)1 86 16 40 - 34
E-Mail: sales@baeder-automotive.com



Printing errors, technical changes and image changes reserved © Ing. A.F. Baeder Ges.m.b.H.

# LED Flashing lights

| LED flashing light yellow | |
|---|---|
| *EMC, R10,* | |
| *18 flash patterns* | *synchronous- or alternating operation* |
| *0,25m cable* | *136x56x24mm* |
| **42 4050 001** | |

| LED flashing light yellow | |
|---|---|
| *ECE R10, ECE R65, IP 67* | |
| *14 flash patterns* | *synchronous- or alternating operation* |
| *1,5m cable* | *96x28x20mm* |
| **42 4054 001** | |

| LED flashing light yellow | |
|---|---|
| *ECE R10, ECE R65, IP 67* | |
| *14 flash patterns* | *synchronous- or alternating operation* |
| *1,5m cable* | *128x28x20mm* |
| **42 4054 011** | |

| LED flashing light yellow | |
|---|---|
| *EMC, ECE R10, IP65* ***without*** *ECE R65 left/right* | |
| *26 flash patterns* | *synchronous- or alternating operation* |
| *1,5m cable* | |
| **42 4054 021** | |

| LED flashing light orange oval | |
|---|---|
| *EMC, ECE R65 & R10, IP67* | |
| *23 flash patterns* | *synchronous- or alternating operation* |
| *1,5m cable* | *80x52x35mm* |
| **42 4054 061** | |

| LED flashing light orange angular shaped | |
|---|---|
| *EMC, ECE R65 & R10, IP67* | |
| *23 flash patterns* | *synchronous- or alternating operation* |
| *1,5m cable* | *73x74,5x32,5mm* |
| **42 4054 071** | |

www.baeder-automotive.com

**Ing. A.F. Baeder Ges.m.b.H.**
1230 Vienna, Kolpingstraße 13
Tel.: +43 (0)1 865 16 40 Fax.: +43 (0)1 865 16 40 - 34
E-Mail: sales@baeder-automotive.com

Printing errors, technical changes and image changes reserved © Ing. A.F. Baeder Ges.m.b.H.

# Interior lights LED

## INPOINT III LED without switch (IP69K)

**39 8900 007** Inpoint III – Interior light LED long
1400 lumen, 12/24 Volt 0,3 m cable

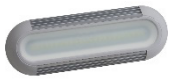

**39 8900 157** Inpoint III – Interior light LED short
700 lumen, 12/24 Volt 0,3 m cable

**39 8900 307** Inpoint III – Interior light LED round
2200 lumen 0,3 m cable

## INPOINT III LED with switch (IP69K)

**39 8900 107** Inpoint III – Interior lamp LED long
with switch 1400 lumen, 12/24 Volt 0,3 m cable

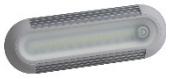

**39 8900 257** Inpoint III – Interior lamp LED short
with switch 700 lumen, 12/24 Volt 0,3 m cable

**39 8900 407** Inpoint III – Interior lamp LED round
with switch 2200 lumen, 12/24 Volt 0,3 m cable

## INPOINT III LED with motion sensor

**39 8900 057** Inpoint III – Interior lamp LED long with motion
sensor 1400 lumen, 12/24 Volt 0,3 m cable

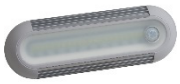

**39 8900 207** Inpoint III – Interior lamp LED short with motion
sensor 700 lumen, 12/24 Volt 0,3 m cable

**39 8900 357** Inpoint III – Interior lamp LED round with motion
sensor 2200 lumen (PIR), 12/24 Volt 0,3 m cable

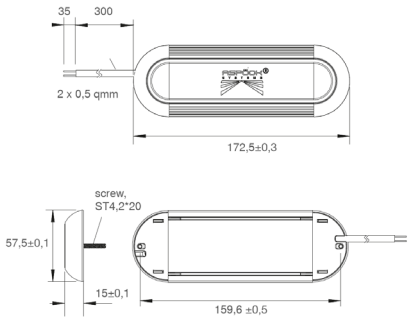


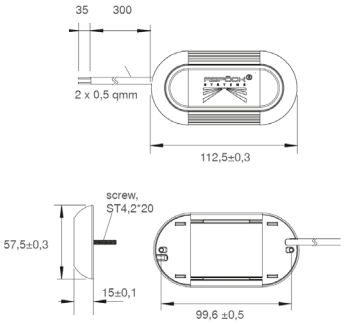


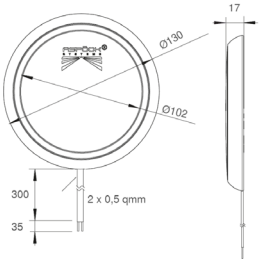



www.baeder-automotive.com

**Ing. A.F. Baeder Ges.m.b.H.**
1230 Vienna, Kolpingstraße 13
Tel.: +43 (0)1 865 16 40 Fax.: +43 (0)1 865 16 40 - 34
E-Mail: sales@baeder-automotive.com



Printing errors, technical changes and image changes reserved © Ing. A.F. Baeder Ges.m.b.H.

# Tubepoint

## PRODUCT ADVANTAGES

- thin design
- different lenghts
- perfect light yield
- abritary expandable with P&R / DC connectors
- subsequent extension at any time possible
- easy and uncomplicated installation

dimensions lens

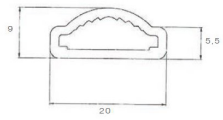


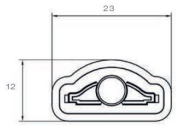


dimensions end cap

| TOTAL LENGTH | 510mm | 960mm | 1410mm |
|---|---|---|---|
| LENGTH OF THE LENS | 450 mm | 900 mm | 1.350 mm |
| NOMINAL VOLTAGE | 12 V oder 24 V | | |
| LUMEN DURING NOMINAL VOLTAGE | 375 lm | 750 lm | 1125 lm |
| POWER | 4,5 W | 9 W | 13,5 W |
| TEMPERATURE RANGE | - 20°C~ + 50°C | | |
| LIGHT COLOUR | 5700 K | | |
| IP CLASS | IP6K9K | | |
| EMV-APPROVAL | R10 | | |

## ACCESSORIES

**21 8007 107**
Pendular bracket

**21 8007 117**
Profile bracket

**21 8007 127**
Direct mounting bracket

**21 8007 137**
Sealing cap

www.baeder-automotive.com

**Ing. A.F. Baeder Ges.m.b.H.**
1230 Vienna, Kolpingstraße 13
Tel.: +43 (0)1 865 16 40 Fax.: +43 (0)1 865 16 40 - 34
E-Mail: sales@baeder-automotive.com

Printing errors, technical changes and image changes reserved © Ing. A.F. Baeder Ges.m.b.H.

# Cable extensions & looms for rear lamps

We offer you special cable extensions to offset the rear lamps on the vehicle. These are equipped with the vehicle-specific plug. The plugs are hot-melted with the cable and provide a high protection against penetration of dirt and water.

| Cable for tail light | |
|---|---|
| *2000mm* | *AMP 7pin.* |
| *connector-lamp 90°* | |
| **69 6116 007** | |

| Intermediate cable for tail light | |
|---|---|
| *1500mm* | *AMP 7pin.* |
| *connector-lamp 90°,<br>connector-vehicle 180°<br>DC output brake at Iveco on the left tail light* | |
| **69 6170 007** | |

| Intermediate cable | |
|---|---|
| *1500mm* | *AMP 7pin.* |
| *output ASS2 7pin. all functions* | |
| **69 6176 007** | |
| *suitable mating plug: 13 5626 631* | |

| Extension cable | |
|---|---|
| *1500mm* | *AMP 7pin.* |
| *both connections 180° (shorter plug, 90° cable bend possible)* | |
| **EL690001** | |

| Extension cable right | |
|---|---|
| *2000mm* | *HDSCS Mercedes* |
| *connector-lamp 90°,<br>connector-vehicle 180°* | |
| **EL690002** | |

| Extension cable left | |
|---|---|
| *2000mm* | *HDSCS Mercedes* |
| *connector-lamp 90°,<br>connect-vehicle 180°* | |
| **EL690003** | |

www.baeder-automotive.com

**Ing. A.F. Baeder Ges.m.b.H.**
1230 Vienna, Kolpingstraße 13
Tel.: +43 (0)1 865 16 40 Fax.: +43 (0)1 865 16 40 - 34
E-Mail: sales@baeder-automotive.com

| Extension cable left/right | |
|---|---|
| *2000mm* | *HDSCS DAF IVECO* |
| *connector-lamp 180°,<br>connect-vehicle 180°* | |
| **EL690004** | |

| Y-Extension cable left/right | |
|---|---|
| *2000mm* | *HDSCS - AMP DAF IVECO* |
| *connector-lamp 180°,<br>connect-vehicle 180°<br>output AMP 7pin. all functions* | |
| **EL690005** | |
| *suitable mating plug: ST0038-01* | |

| Y-Extension cable right | |
|---|---|
| *2000mm* | *HDSCS MB* |
| *connector-lamp 90°,<br>connect-vehicle 180°<br>output AMP 7pin. all functions* | |
| **EL690012** | |
| *suitable mating plug: ST0038-01* | |

| Cable for tail light right | |
|---|---|
| ASS2 7pin. 45° green | |
| **68 2407 017** | *3000mm* |
| **68 2407 047** | *4000mm* |
| **68 2407 027** | *5000mm* |

| Cable for tail light left | |
|---|---|
| ASS2 7pin. 45° yellow | |
| **68 2408 017** | *3000mm* |
| **68 2408 047** | *4000mm* |
| **68 2408 027** | *5000mm* |

| 15pin. Extension cable | |
|---|---|
| *3000mm* | *ISO12098 plug - socket* |
| **EL690020** | |

| 7-pin. EBS Extension cable | |
|---|---|
| *3000mm* | *ISO7638-1 plug - socket* |
| **78 7095 037** | |

www.baeder-automotive.com

**Ing. A.F. Baeder Ges.m.b.H.**
1230 Vienna, Kolpingstraße 13
Tel.: +43 (0)1 865 16 40 Fax.: +43 (0)1 865 16 40 - 34
E-Mail: sales@baeder-automotive.com

Printing errors, technical changes and image changes reserved. © Ing. A.F. Baeder Ges.m.b.H.

# Cable on reel

High quality cables marketed by Aspöck!
Please don't hesitate to contact us, if you need any accessories!

## ROUND CABLE

| Item number | Name | ADR | Pin | Length | Diameter | Colour |
|---|---|---|---|---|---|---|
| 17 7205 117 | 2x0,5mm² | ADR | 2 pin | 100m | 4,6x2,9mm oval | 🟤 ⚪ |
| 17 7207 117 | 2x0,5mm² | ADR | 2 pin | 100m | 4,8mm | 🟤 ⚪ |
| 17 7203 027 | 2x0,75mm² | - | 2 pin | 100m | 5,2mm | 🟤 ⚪ |
| 17 7213 287 | 2x1mm² | ADR | 2 pin | 200m | 5,6mm | 🟤 ⚪ |
| 17 7214 127 | 2x1mm² | ADR | 2 pin | 200m | 5,6mm | ⚫ ⚪ |
| 17 7223 127 | 2x1,5mm² | ADR | 2 pin | 200m | 6,0mm | 🟤 ⚪ |
| 17 7224 127 | 2x1,5mm² | ADR | 2 pin | 200m | 6,0mm | ⚫ ⚪ |
| 17 7232 017 | 2x2,5mm² | - | 2 pin | 100m | 7,4mm | 🔵 🟤 |
| 17 7400 027 | 4x0,75mm² | - | 4 pin | 100m | 6,0mm | 🟡 🔴 ⚫ ⚪ |
| 17 7417 117 | 4x1mm² | ADR | 4 pin | 100m | 6,4mm | 🔵 ⚪ 🟣 🟣 |
| 17 7500 017 | 5x0,75mm² | - | 5 pin | 25m | 6,4mm | 🔵 🟡 🔴 ⚫ ⚪ |
| 17 7500 027 | 5x0,75mm² | - | 5 pin | 100m | 6,4mm | 🔵 🟡 🔴 ⚫ ⚪ |
| 17 7501 017 | 5x0,75mm² | - | 5 pin | 100m | 6,4mm | 🔵 🟡 🔴 ⚫ ⚪ |
| 17 7710 017 | 7x1mm² | - | 7 pin | 100m | 7,3mm | 🔵 🟤 🟡 🟢 🔴 ⚫ ⚪ |
| 17 7711 117 | 7x1mm² | - | 7 pin | 100m | 7,3mm | 🔵 🟤🔵 ⚪ 🟠 🟣 🟣 ◐ |
| 17 7712 117 | 7x1mm² | ADR | 7 pin | 100m | 7,3mm | 🔵 🟤 ⚪ 🟢 🔴 ⚫ ⚪ |

www.baeder-automotive.com

**Ing. A.F. Baeder G.m.b.H.**
1230 Vienna, Kolpingstraße 13
Tel.: +43 (0)1 865 16 40 Fax.: +43 (0)1 86 16 40 - 34
E-Mail: sales@baeder-automotive.com

Printing errors, technical changes and image changes reserved © Ing. A.F. Baeder Ges.m.b.H.

| Item number | Name | ADR | Pin | Length | Diameter | Colour |
|---|---|---|---|---|---|---|
| 17 7713 127 | 7x1mm² | ADR | 7 pin | 100m | 7,3mm | |
| 17 7723 117 | 7x1,5mm² | ADR | 7 pin | 100m | 8,2mm | |
| 17 7799 117 | 2x4+5x1,5mm² | - | 7 pin | 50m | 10,5mm | |
| 17 7502 017 | 4x0,75+1x1,5mm² | - | 5 pin | 100m | 6,5mm | |
| 17 7795 117 | 5x1+2x2,5mm² | ADR | 7 pin | 50m | 9,0mm | |
| 17 7806 117 | 6x1+2x2,5mm² | ADR | 8 pin | 50m | 9,8mm | |
| 17 7898 017 | 7x1+1x1,5mm² | - | 8 pin | 50m | 8,6mm | |
| 17 7945 037 | 7x1,5+5x2,5mm² | - | 12 pin | 25m | 12,5mm | |
| 17 7952 127 | 12x1+3x2,5mm² | ADR | 15 pin | 50m | 11,4mm | |

## FLAT CABLE

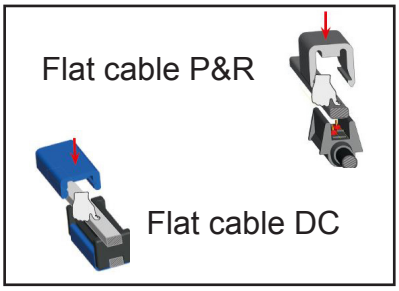


| Item number | Name | ADR | Length | Dimension | Colour | Type |
|---|---|---|---|---|---|---|
| 17 7225 024 | 2x1,5mm² | ADR | 32m | 6,6x3,9mm | | P&R |
| 17 7225 127 | 2x1,5mm² | ADR | 200m | 6,6x3,9mm | | P&R |
| 17 7200 057 | 2x0,75mm² | - | 25m | 5,7x3,6mm | | DC |
| 17 7200 077 | 2x0,75mm² | - | 100m | 5,7x3,6mm | | DC |

www.baeder-automotive.com

**Ing. A.F. Baeder G.m.b.H.**
1230 Vienna, Kolpingstraße 13
Tel.: +43 (0)1 865 16 40 Fax.: +43 (0)1 86 16 40 - 34
E-Mail: sales@baeder-automotive.com

Printing errors, technical changes and image changes reserved © Ing. A.F. Baeder Ges.m.b.H.

# Corrugated pipes PA standard

The standard PA corrugated pipes are made of a polyamide 6, which is modified with a special heat stabilizer to achieve a particularly high thermoformability. The Standard PA corrugated pipes are halogen, cadmium and UV resistant.

| Articlenumber | Nominal diameter | Ø A mm | Ø I mm | a mm | b mm | s mm | Quantity delivered m |
|---|---|---|---|---|---|---|---|
| STWR-007 | 7,5 | 10,0 | 6,7 | 2,7 | 1,8 | 0,20 | 50 |
| STWR-008 | 8,5 | 11,4 | 8,4 | 2,4 | 1,5 | 0,20 | 50 |
| STWR-010 | 10 | 13,0 | 9,9 | 2,7 | 1,8 | 0,25 | 50 |
| STWR-013 | 13 | 15,8 | 12,7 | 2,7 | 1,8 | 0,30 | 50 |
| STWR-016 | 16 | 21,0 | 17,0 | 2,9 | 1,9 | 0,30 | 50 |
| STWR-017 | 17 | 21,2 | 16,6 | 3,3 | 2,3 | 0,30 | 50 |
| STWR-022 | 22 | 25,4 | 21,3 | 3,1 | 2,2 | 0,40 | 50 |
| STWR-026 | 26 | 31,2 | 25,8 | 3,4 | 2,3 | 0,40 | 25 |
| STWR-029 | 29 | 34,5 | 29,0 | 3,4 | 2,3 | 0,40 | 25 |
| STWR-037 | 37 | 42,4 | 36,0 | 4,2 | 2,8 | 0,40 | 25 |

Corrugated pipe sectional view

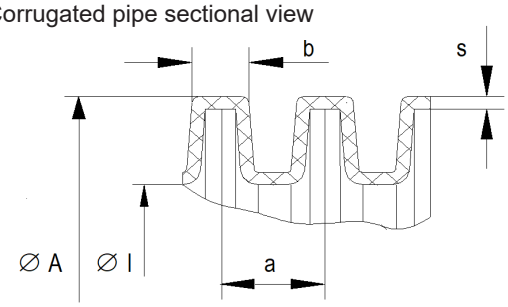


The installation of PA corrugated pipes are permitted in vehicles for transporting dangerous goods to ADR, GGVS!

| Technical Data: | |
|---|---|
| Long term temparature | - 40 °C bis + 140 °C |
| Short time temperature | + 160 °C |
| Density (DIN 53 479) | 1,12 bis 1,15 g/m³ |
| Humiditiy absorption | 2,5 bis 3 % |
| Yield stress (DIN 53 455) | 40 - 70 Mpa |
| Elogation of break (DIN 53 455) | 50 - 200 % |
| E - Module (DIN 53 457) | 1200 - 2000 MPa |
| Impact strength (DIN 53 453) | without Break |
| Notch impact strength (DIN 53 453) | without Break |
| Flammability | FMVSS 302 Typ B (v<100 mm / min); UL 94 - HB |

https://www.baeder-automotive.com

**Ing. A.F. Baeder G.m.b.H.**
1230 Vienna, Kolpingstraße 13
Phone.: +43 (0)1 865 16 40 Fax.: +43 (0)1 865 16 40 - 34
E-Mail: sales@baeder-automotive.com

Printing errors, technical changes and image changes reserved © Ing. A.F. Baeder Ges.m.b.H..

# Wavepipe sinus cut & Duo

Our sinus cut and duo corrugated pipes are made from a modified polypropylene. They are characterized by high heat resistance and low temperature impact strength and can be used because of their good chemical resistance in almost all areas of a vehicle

| Articlenumber | Nominal diameter | Ø A mm | Ø I mm | a mm | b mm | s mm | Quantity delivered m |
|---|---|---|---|---|---|---|---|
| STWR-004SG | 4,5 | 7,1 | 4,8 | 2,2 | 1,2 | 0,15 | 50 |
| STWR-007SG | 7,5 | 10,0 | 7,2 | 2,7 | 1,8 | 0,15 | 50 |
| STWR-008SG | 8,5 | 11,4 | 8,5 | 2,4 | 1,5 | 0,20 | 50 |
| STWR-010SG | 10 | 13,0 | 10,0 | 2,7 | 1,8 | 0,25 | 50 |
| STWR-013SG | 13 | 15,8 | 12,9 | 2,7 | 1,8 | 0,30 | 50 |
| STWR-017SG | 17 | 21,2 | 16,8 | 3,3 | 2,3 | 0,30 | 50 |
| STWR-022SG | 22 | 25,4 | 21,5 | 3,1 | 2,2 | 0,40 | 50 |
| STWR-026SG | 26 | 31,2 | 25,9 | 3,1 | 2,2 | 0,40 | 25 |
| STWR-029SG | 29 | 34,5 | 29,0 | 3,4 | 2,3 | 0,40 | 25 |

| Articlenumber | Descritpion |
|---|---|
| STWR-098 | Assembling aid NW 4,5-10 |
| STWR-099 | Assembling aid NW 12-26 |

Corrugated pipe sectional view

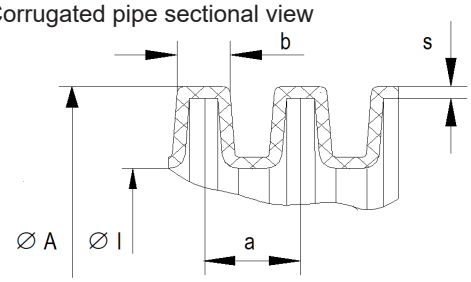

| Technical Data: | |
|---|---|
| Long term temperature | - 40 °C bis + 130 °C |
| Short term temperature | + 150 °C |
| Density (DIN 53 479) | 0,91 bis 0,93 g/m³ |
| Moisture absorption | < 0,1 % |
| Tensile stress at yleld (DIN 53 455) | 15 - 20 Mpa |
| Elogation of break (DIN 53 455) | >300 % |
| E - Module (DIN 53 457) | 500 - 700 MPa |
| Impact strength (DIN 53 453) | without Break |
| Notch Impact strength (DIN 53 453) | without Break |
| Flammability | FMVSS 302 (v<100 mm / min) |

| Articlenumber | nominal diameter | Ø A mm | Ø I mm | a mm | b mm | s mm | quantity delivered m |
|---|---|---|---|---|---|---|---|
| STWR-010DUO | 10 | 12,9 | 7,9 | 2,7 | 1,8 | 0,25 | 50 |
| STWR-012DUO | 12 | 15,8 | 10,3 | 2,7 | 1,8 | 0,25 | 50 |
| STWR-016DUO | 16 | 21,0 | 13,9 | 3,1 | 2,2 | 0,30 | 50 |
| STWR-029DUO | 29 | 34,5 | 26,6 | 3,4 | 2,3 | 0,4 | 25 |

https://www.baeder-automotive.com

**Ing. A.F. Baeder G.m.b.H.**
1230 Vienna, Kolpingstraße 13
Phone.: +43 (0)1 865 16 40 Fax.: +43 (0)1 865 16 40 - 34
E-Mail: sales@baeder-automotive.com

Printing errors, technical changes and image changes reserved © Ing. A.F. Baeder Ges.m.b.H.

# Junction boxes

| Junction box high cover | |
|---|---|
| *14 connectors PG* | **76 5100 001** |

| Junction box low cover | |
|---|---|
| *8 connectors PG* | **76 5100 041** |

| Junction box 12V | |
|---|---|
| *inclusive grommets* | **15 5616 504** |

| Junction box |
|---|
| **MN99006** |

| Junction box |
|---|
| **MN99010** |

| Junction box |
|---|
| **MN99011** |

www.baeder-automotive.com

**Ing. A.F. Baeder Ges.m.b.H.**
1230 Vienna, Kolpingstraße 13
Tel.: +43 (0)1 865 16 40 Fax.: +43 (0)1 865 16 40 - 34
E-Mail: sales@baeder-automotive.com

Printing errors, technical changes and image changes reserved. © Ing. A.F. Baeder Ges.m.b.H.

# Contour markings ECE 104 / ECE 48

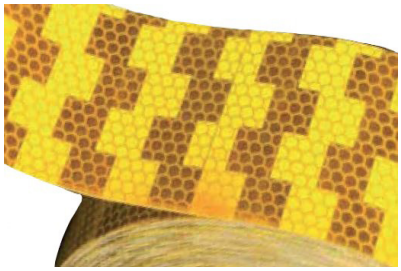

Avery's premium contour markings are made of 3 layers and are usable for at least 7 years.

| **Contour markings Premium 50mmx50m** brand: Avery | | |
|---|---|---|
| **white** | *fixed bodywork* | **15 5990 007** |
| | *tanker* | **15 5990 057** |
| | *tarpaulin* | **15 5990 407** |
| **yellow** | *fixed bodywork* | **15 5990 107** |
| | *tanker* | **15 5990 157** |
| | *tarpaulin* | **15 5990 507** |
| **red** | *fixed bodywork* | **15 5990 207** |
| | *tanker* | **15 5990 257** |
| | *tarpaulin* | **15 5990 607** |

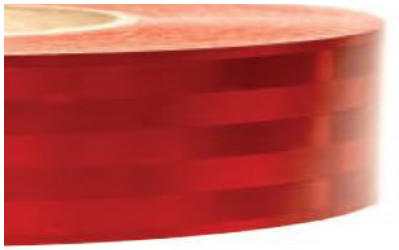

3M's value contour markings are made of one layer and have a 5 year guarantee.

| **Contour markings Value 50mmx50m** brand: 3M | | |
|---|---|---|
| **white** | *fixed bodywork* | **KM1050-WE** |
| | *tarpaulin* | **KM2050-WE** |
| **yellow** | *fixed bodywork* | **KM1050-GE** |
| | *tarpaulin* | **KM2050-GE** |
| **red** | *fixed bodywork* | **KM1050-RO** |
| | *tarpaulin* | **KM2050-RO** |
| | *tanker* | **KM3050-RO** |

https://www.baeder-automotive.com

**Ing. A.F. Baeder G.m.b.H.**
1230 Vienna, Kolpingstraße 13
Phone.: +43 (0)1 865 16 40 Fax.: +43 (0)1 865 16 40 - 34
E-Mail: sales@baeder-automotive.com

Printing errors, technical changes and image changes reserved © Ing. A.F. Baeder Ges.m.b.H..

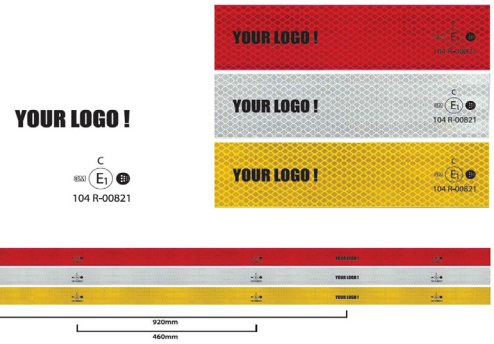


We also offer contour markings with your own logo. The logo will be printed in black.

| Contour markings Premium with your logo 50mmx50m<br>brand: 3M-Premium<br>*minimum order quantity: 48 pieces* | | |
|---|---|---|
| **white** | *fixed bodywork* | **15 5990 007L** |
| **yellow** | *fixed bodywork* | **15 5990 107L** |
| **red** | *fixed bodywork* | **15 5990 207L** |

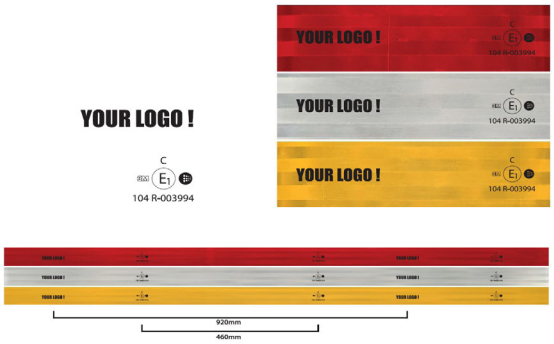

| Contour markings Value with your logo 50mmx50m<br>brand: 3M<br>*minimum order quantity: 48 pieces* | | |
|---|---|---|
| **white** | *fixed bodywork* | **KM1050-WE-LOGO** |
| **yellow** | *fixed bodywork* | **KM1050-GE-LOGO** |
| **red** | *fixed bodywork* | **KM1050-RO-LOGO** |

https://www.baeder-automotive.com

**Ing. A.F. Baeder G.m.b.H.**
1230 Vienna, Kolpingstraße 13
Phone.: +43 (0)1 865 16 40 Fax.: +43 (0)1 865 16 40 - 34
E-Mail: sales@baeder-automotive.com

Printing errors, technical changes and image changes reserved © Ing. A.F. Baeder Ges.m.b.H.

# Warning signs and foils

| | |
|---|---|
| **WT0004-F** | Warning foil **DIN11030**<br>423x423mm red/white **adhesive** |
| **14 4220 007** | Warning sign **DIN11030**<br>423x423x1,0mm red/white **aluminium** |

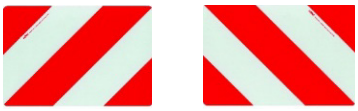

| | |
|---|---|
| **WT0005-F** | Warning foil **DIN11030** left & right<br>423x482mm red/white **adhesive** |
| **WT0005-T** | Warning sign **DIN11030** left & right<br>423x482x0,8mm red/white **sheet steel** |

| | |
|---|---|
| **WT0009-T** | Warning marking lift **left & right**<br>250x400mm with **mounting rail** |

| | |
|---|---|
| **WT0001-F** | Warning foil truck **ECE 70.01 left & right**<br>565x130mm red/yellow **adhesive** |
| **WT0001-T** | Warning sign truck **ECE 70.01 left & right**<br>565x130x1,0mm red/yellow **aluminium** |

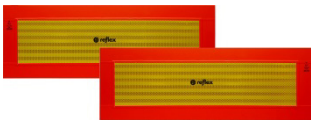

| | |
|---|---|
| **WT0002-F** | Warning foil trailer **ECE 70.01** 2 pieces<br>565x195mm red/yellow **adhesive** |
| **WT0002-T** | Warning sign trailer **ECE 70.01** 2 pieces<br>565x195x1,0mm red/yellow **aluminium** |

| | |
|---|---|
| **WT0003-T** | Warning sign trailer **ECE 70.01**<br>1130x195x1,5mm red/yellow **aluminium** |

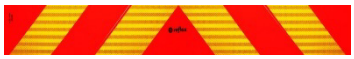

| | |
|---|---|
| **WT0006-T** | Warning sign truck **ECE 70.01**<br>1130x130x1,5mm red/yellow **aluminium** |

| | |
|---|---|
| **WT0010-TA** | Warning sign - vertically foldable<br>400x300x1,0mm orange **aluminium**<br>**central** hole and rubber frame |
| **WT0010-TS** | Warning sign - vertically foldable<br>400x300x0,8mm orange **steel**<br>with hole **on the top** and rubber frame |

www.baeder-automotive.com

**Ing. A.F. Baeder Ges.m.b.H.**
1230 Vienna, Kolpingstraße 13
Tel.: +43 (0)1 865 16 40 Fax.: +43 (0)1 865 16 40 - 34
E-Mail: sales@baeder-automotive.com

Printing errors, technical changes and image changes reserved © Ing. A.F. Baeder Ges.m.b.H.

| | |
|---|---|
| **WT0007-T** | Warning sign for slow-moving vehicles<br>ECE 69.00; 365x365mm **sheet steel** |
| **WT0007-TK** | Warning sign for slow-moving vehicles<br>ECE 69.00; 365x365mm **plastic** |

| | |
|---|---|
| **WT0011-F** | Route license plate |

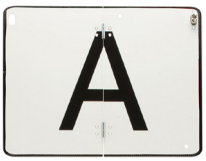


| | |
|---|---|
| **WT0012-T** | Warning panel vertically foldable<br>waste material; 400x300x0.8mm white **steel**<br>with hole **on top** & edge protection |

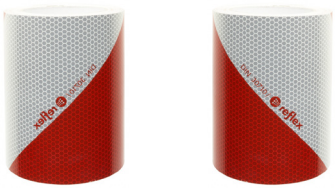

| | |
|---|---|
| **WM0001-K** | Warning marking **DIN30710** red / white<br>2 pieces 9m x 141mm **left / right** |
| **WM0002-K** | Warning marking **DIN30710** red / white<br>1 piece 9m x 141mm **right** |
| **WM0003-K** | Warning marking **DIN30710** red / white<br>1 piece 9m x 141mm **left** |

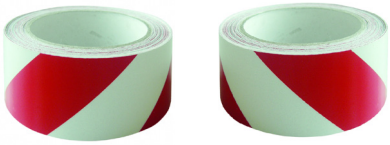

| | |
|---|---|
| **WM0004-K** | Warning marking **industrial** red / white<br>1 piece 11.5m x 50mm **left** |
| **WM0005-K** | Warning marking **industrial** red / white<br>1 pc. 11.5m x 50mm **right** |

| | |
|---|---|
| **WM0006-K** | Warning marking **container** red / white<br>8 pcs. 705mmm x 141mm **4xleft / 4xright** |
| **WM0007-K** | Warning marking **container** red / white<br>1 pc. 705mmm x 141mm **left** |
| **WM0008-K** | Warning marking **container** red / white<br>1 pc. 705mmm x 141mm **right** |

www.baeder-automotive.com

**Ing. A.F. Baeder Ges.m.b.H.**
1230 Vienna, Kolpingstraße 13
Tel.: +43 (0)1 865 16 40 Fax.: +43 (0)1 865 16 40 - 34
E-Mail: sales@baeder-automotive.com

Printing errors, technical changes and image changes reserved © Ing. A.F. Baeder Ges.m.b.H.

| | | | | | | | | |
|---|---|---|---|---|---|---|---|---|
| **ST0502-01**<br>7-pol. Stecker Alu<br>Schraubkontakte<br>**ISO 1724** | **ST0503-01**<br>7-pol. Stecker Alu<br>Flachstecker<br>**ISO 1724** | **ST0504-01**<br>7-pol. Stecker<br>Schraubkontakte<br>**ISO 1724** | **ST0505-01**<br>7-pol. Stecker Kunststoff<br>Flachstecker<br>**ISO 1724** | **ST0506-01**<br>7-pol. Stecker Kunststoff<br>2 fach Tülle - Flachstecker<br>**ISO 1724** | **ST0507-01**<br>7-pol. Steckdose<br>Schraubkontakte<br>**ISO 1724** | **ST0508-01**<br>7-pol. Steckdose Alu<br>Flachstecker<br>**ISO 1724** | **ST0509-01**<br>7-pol. Steckdose<br>Schraubkontakte<br>**ISO 1724** | **ST0510-01**<br>7-pol. Steckdose<br>Einzel-Flachstecker<br>**ISO 1724** |
| **ST0511-01**<br>7-pol. Steckdose<br>Doppel-Flachstecker<br>**ISO 1724** | **ST0512-01**<br>7-pol. Steckdose<br>Schraubkontakte<br>**ISO 1724** | **ST0513-02**<br>1-fach Tülle zu<br>7-pol. Steckdose<br>**ISO 1724** | **ST0514-02**<br>2-fach Tülle zu<br>7-pol. Steckdose<br>**ISO 1724** | **ST0515-01**<br>7-pol. Stecker<br>Schraubkontakte<br>**ISO 3732** | **ST0516-01**<br>7-pol. Steckdose<br>Schraubkontakte<br>**ISO 3732** | **ST0520-01**<br>13-pol. Stecker<br>Schraubkontakte<br>**ISO 11446** | **ST0521-01**<br>13-pol. Steckdose<br>Schraubkontakte<br>**ISO 11446** | **ST0522-01**<br>13-pol. Steckdosen-<br>kupplung<br>**ISO 11446** |
| **ST0523-04**<br>7-pol./13-pol. Parkdose<br>**ISO 1724 & 11446** | **ST0524-03**<br>13-pol.Adapter auf<br>7.pol-Steckdose<br>**ISO 11446** | **ST0525-03**<br>7-pol.Adapter auf<br>13.pol-Steckdose<br>**ISO 11446** | **ST0526-01**<br>7-pol. Stecker Alu<br>Schraubkontakte<br>**ISO 1185** | **ST0527-01**<br>7-pol. Stecker Alu<br>Schraubkontakte<br>**ISO 3731** | **ST0528-01**<br>7-pol. Stecker Kunststoff<br>Schraubkontakte<br>**ISO 1185** | **ST0529-01**<br>7-pol. Stecker Kunststoff<br>Schraubkontakte<br>**ISO 3731** | **ST0552-01**<br>7 pol. Steckdose<br>Schraubkontakte<br>**ISO 1185** | **ST0551-01**<br>7 pol. Steckdose<br>Schraubkontakte<br>**ISO 3731** |
| **ST0530-01**<br>7-pol. Steckdose<br>Flachstecker<br>**ISO 1185** | **ST0531-01**<br>7-pol. Steckdose<br>Flachstecker<br>**ISO 3731** | **ST0553-04**<br>7 pol. Parkdose<br>**ISO 1185, 3731** | **ST0532-02**<br>Tülle für 7-pol.<br>Steckdose<br>**ISO 1185/3731** | **ST0534-01**<br>13-pol. Stecker<br>Crimpkontakte<br>**ISO 12098** | **ST0536-01**<br>13-pol. Steckdose<br>Crimpkontakte<br>**ISO 12098** | **ST0537-01**<br>15-pol. Stecker<br>Schraubkontakte<br>**ISO 12098** | **ST0539-01**<br>15-pol. Steckdose<br>Schraubkontakte<br>**ISO 12098** | **ST0541-01**<br>7-pol. EBS Stecker<br>Schraubkontakte<br>**ISO 7638-1** |
| **ST0542-01**<br>7-pol. Stecker EBS<br>Crimpkontakte<br>**ISO 7638-1** | **ST0543-01**<br>7-pol. EBS Steckdose<br>Schraubkontakte<br>**ISO 7638-1** | **ST0544-01**<br>7-pol. Steckdose EBS<br>Crimpkontakte<br>**ISO 7638-1** | **ST0545-04**<br>15-pol. Parkdose<br>**ISO 7638, 12098, 25981** | **ST0546-03**<br>15-pol. Stecker auf<br>2x7-pol. Steckdose<br>**ISO 12098 auf 1185/3731** | **ST0547-01**<br>3-pol. Stecker<br>Flachstecker<br>**ISO 9680** | **ST0548-01**<br>3-pol. Steckdose<br>Flachstecker<br>**ISO 9680** | **ST0549-01**<br>3-pol. Stecker Kunststoff<br>Schraubkontakte<br>**ISO 1724** | **ST0550-01**<br>3-pol. Stecker Kunststoff<br>Schraubkontakte<br>**ISO 1724** |
| **ST0501-01**<br>2-pol. Nato-Stecker<br>**Crimp-/ Lötkontakte**<br>**ISO VG 96 917** | **ST0500-01**<br>2-pol. Nato-Steckdose<br>**Crimp-/ Lötkontakte**<br>**ISO VG 96 917** | **28-03600**<br>14-pol. Stecker VBG<br>Flachstecker | **28-036200**<br>17-pol. Stecker VBG<br>Flachstecker | **28-036300**<br>SAL<br>17-pol. Stecker VBG<br>Flachstecker | **28-029000**<br>14-pol. Steckdose VBG<br>Flachstecker | **28-029200**<br>17-pol. Steckdose VBG<br>Flachstecker | **28-034500**<br>SAL<br>17-pol. Steckdose VBG<br>Flachstecker | **0351100**<br>10 Pin Stecker Set<br>Schraubkontakte |
| **EW0002-7N**<br>Elektrowendel 7-pol.<br>Arbeitslänge 3,5m<br>ISO1185 24V DI=19mm | **EW0003-7S**<br>Elektrowendel 7-pol.<br>Arbeitslänge 3,5m<br>ISO3731 24V DI=19mm | **EW0004-15**<br>Elektrowendel 15-pol.<br>Arbeitslänge 3,5m<br>ISO12098 24V DI=22mm | **EW0001-EBS**<br>ELektrowendel EBS<br>Arbeitslänge 3,5m<br>ISO7638 DI=24mm | **D11487**<br>Elektrowendel 15+7+7<br>alle 15 Pin‘s belegt | **EW0005-15-7N-7S**<br>Elektrowendel 15/7/7pol.<br>Arbeitslänge 3,5m<br>ISO12098/ISO1185/<br>ISO3731 DI=19mm | **EW0005-15-7S-1**<br>Elektrowendel 15/7/7pol.<br>Arbeitslänge 3,5m<br>ISO12098/ISO1185/<br>ISO3731 DA=40mm | **EW0006-35-Nato**<br>Elektrowendel Nato 2-pol.<br>Arbeitslänge 4,5m<br>2x35mm² | **28-033600**<br>Elektrowendel 14p.- 15p.<br>ISO12098 |
| | | | | | | | Schraubkontakte<br>Flachstecker | |


**Ing. A.F. Baeder G.m.b.H.**
Kolpingstrasse 13
A-1230 Wien

Tel.: +43 (0)1 865 16 40
Fax.: +43 (0)1 865 16 40 - 34
sales@baeder-automotive.com


**www.baeder-automotive.com**

| | | | | | | | | | |
|---|---|---|---|---|---|---|---|---|---|
| **ST0001-01**<br>KIT socket<br>2-pins<br>**Super Seal** | **ST0004-01**<br>KIT socket<br>2-pins NW 4,5<br>**Super Seal** | **ST0005-01**<br>KIT socket<br>2-pins NW 7,5-10<br>**Super Seal** | **ST0002-02**<br>T-Joint Seal contacts<br>**Super Seal** | **ST0006-01**<br>KIT socket<br>3-pins<br>**Super Seal** | **ST0082-01**<br>KIT socket<br>3-pins NW 4,5-10<br>**Super Seal** | **ST0007-01**<br>KIT socket<br>4-pins<br>**Super Seal** | **ST0083-01**<br>KIT socket<br>4-pins NW 8,5-10<br>**Super Seal** | **ST0008-01**<br>KIT socket<br>5-pins<br>**Super Seal** | **ST0084-01**<br>KIT socket<br>5-pins NW 10<br>**Super Seal** |
| **ST0009-01**<br>KIT socket<br>6-pins<br>**Super Seal** | **ST0085-01**<br>KIT socket<br>6-pins NW 10<br>**Super Seal** | **ST0003-01**<br>KIT plug<br>2-pins NW 4,5<br>**Super Seal** | **ST0015-01**<br>KIT plug<br>2-pins NW 7,5-10<br>**Super Seal** | **ST0016-01**<br>KIT plug<br>3-pins<br>**Super Seal** | **ST0086-01**<br>KIT plug<br>3-pins NW 4,5-10<br>**Super Seal** | **ST0017-01**<br>KIT plug<br>4-pins<br>**Super Seal** | **ST0087-01**<br>KIT plug<br>4-pins NW 8,5-10<br>**Super Seal** | **ST0018-01**<br>KIT plug<br>5-pins<br>**Super Seal** | **ST0088-01**<br>KIT plug<br>5-pins NW 10<br>**Super Seal** |
| **ST0019-01**<br>KIT plug<br>6-pins<br>**Super Seal** | **ST0089-01**<br>KIT plug<br>6-pins NW 10<br>**Super Seal** | **ST0079-02**<br>Protection Cap for 2-pins connectors, rubber for 2-pins Super Seal | **ST0090-02**<br>Protection Cap for 3-pins connectors, rubber for 3-pins Super Seal | **ST0091-02**<br>Protection Cap for 4-pins connectors, rubber for 4-pins Super Seal | **ST0092-02**<br>Protection Cap for 5-pins connectors, rubber for 5-pins Super Seal | **ST0093-02**<br>Protection Cap for 6-pins connectors, rubber for 6-pins Super Seal | **ST0074-01**<br>KIT socket<br>2-pins<br>**DEUTSCH** | **ST0073-01**<br>KIT plug<br>2-pins<br>**DEUTSCH** | **ST0099-02**<br>T-connector<br>3x2-pins<br>**DEUTSCH** |
| **ST0025-01**<br>KIT socket<br>3-pins<br>**DEUTSCH** | **ST0026-01**<br>KIT plug<br>3-pins<br>**DEUTSCH** | **ST0027-01**<br>KIT socket<br>3-pins<br>**DEUTSCH** | **ST0028-01**<br>KIT plug<br>3-pins<br>**DEUTSCH** | **ST0020-01**<br>KIT socket<br>4-pins<br>**DEUTSCH** | **ST0021-01**<br>KIT plug<br>4-pins<br>**DEUTSCH** | **ST0022-01**<br>KIT socket<br>6-pins<br>**DEUTSCH** | **ST0023-01**<br>KIT plug<br>6-pins<br>**DEUTSCH** | **ST0095-01**<br>Plug System<br>8-pins<br>**DEUTSCH** | **ST0096-01**<br>Plug System<br>8-pins<br>**DEUTSCH** |
| **ST0602-01**<br>Plug System<br>12-pins<br>**DEUTSCH** | **ST0603-01**<br>Plug System<br>12-pins<br>**DEUTSCH** | **ST0024-03**<br>End plug – white System<br>**DEUTSCH** | **ST0029-01**<br>KIT socket NW 10 – 90°<br>**Renault, Volvo, DAF LF, Iveco** | **ST0030-01**<br>KIT socket<br>NW 8,5 – 90°<br>**MB Actros, Axor** | **ST0031-01**<br>KIT socket<br>NW 10 – 180°<br>**Renault, Volvo, DAF LF** | **ST0032-01**<br>KIT socket<br>NW 8,5 – 180°<br>**MB Actros,Axor** | **ST0033-01**<br>KIT socket diameter cable 5-12mm – 180°<br>**Scania** | **ST0034-01**<br>KIT socket cable D 5mm – 90°<br>**Sprinter,VW Crafter** | **ST0035-01**<br>KIT plug<br>NW 10 – 90° |
| **ST0036-01**<br>KIT plug<br>NW 8,5 – 90° | **ST0037-01**<br>KIT plug<br>NW 10 – 180° | **ST0038-01**<br>KIT plug<br>NW 8,5 – 180° | **ST0039-01**<br>KIT plug<br>cable D 5mm – 90°<br>**Sprinter, Crafter** | **ST0040-01**<br>KIT plug<br>cable D 10mm –180°<br>**Scania** | **ST0041-01**<br>KIT socket<br>NW 8,5 – 180°<br>**MAN, TGA, TGL** | **ST0042-01**<br>KIT socket<br>D 11 – 90°<br>**DAF XF 95, 105 2001** | **ST0043-01**<br>KIT plug<br>90°<br>**DAF, DAF XF 95, 105** | **ST0044-01**<br>KIT socket<br>1995-2000<br>**DAF** | **ST0045-01**<br>KIT socket<br>**MB Atego, F2000, DAF 65, 75, 85** |
| **ST0046-01**<br>KIT socket<br>10-pins<br>**Iveco** | **ST0047-01**<br>KIT socket<br>3-pins<br>**Iveco** | **ST0048-01**<br>KIT socket<br>4-pins<br>NW 8,5 – 90° | **ST0049-01**<br>KIT socket<br>4-pins<br>cable D 5mm – 90° | **ST0050-01**<br>KIT socket<br>4-pins<br>NW 8,5 – 180° | **ST0051-01**<br>KIT socket<br>4-pins<br>cable D 5-12mm – 180° | **ST0081-01**<br>KIT plug<br>4-pins<br>NW 8,5 – 180° | **ST0052-01**<br>KIT socket<br>4-pins<br>**MAN** | **ST0053-01**<br>KIT socket 2-pins PSB for side marker 1.5m<br>**MAN** | **ST0054-01**<br>KIT plug 2-pins PSB for side marker 1,3m<br>**MAN** |
| **ST0055-01**<br>KIT plug 2-pins for indicator<br>**MAN F2000** | **ST0075-02**<br>Adapter 3way housing | **ST0056-01**<br>KIT socket 2-pins side indicators<br>**Volvo** | **ST0057-01**<br>KIT socket 2-pins side indicators<br>**MAN, TGA, TGL** | **ST0058-02**<br>Adapter 2 way | **ST0059-01**<br>KIT plug 4-pins front indicator<br>**MAN TGA, TGL** | **ST0060-01**<br>KIT socket 4-pins front indicator<br>**MAN, TGA, TGL** | **ST0061-01**<br>KIT socket 4-pins L front indicator + H4<br>**MAN, TGA,TGL** | **ST0062-02**<br>Adapter 4 way | **ST0063-01**<br>KIT plug<br>4-pins<br>**MAN TGA, TGL** |
| **ST0064-01**<br>KIT socket<br>2-pins<br>**MB Actros, Atego** | **ST0065-01**<br>KIT socket<br>2-pins NW 7,5<br>**Scania** | **ST0066-01**<br>KIT socket<br>2-pins NW 8,5 - 45°<br>**Volvo** | **ST0097-01**<br>Socket 2 pin male<br>NW 8,5 - 180°<br>**MB, Scania, Volvo** | **ST0067-01**<br>KIT socket<br>2-pins JPT<br>for side marker 1.5m | **ST0068-01**<br>KIT socket<br>2-pins JPT<br>NW 4,5 – 180° | **ST0069-01**<br>KIT socket<br>2-pins JPT<br>NW 10 (inner) – 180° | **ST0070-01**<br>KIT socket<br>2-pins JPT | **ST0094-01**<br>Plug repair KIT<br>2 pins - 2JPT1<br>**universal** | **ST0071-01**<br>KIT socket<br>3-pins JPT – fog lamps<br>**DAF** |
| **ST0072-01**<br>KIT socket<br>3-pins JPT side marker<br>**DAF, Renault** | **ST0076-01**<br>KIT socket<br>8-pins straight, HDSCS<br>**DAF** | **ST0077-01**<br>KIT socket<br>8-pins angled, HDSCS<br>**DAF** | **ST0078-01**<br>KIT plug<br>8-pins straight, HDSCS<br>**DAF** | **ST0080-01**<br>KIT plug<br>7-pins angled, HDSCS<br>**Mercedes** | **ST0600-01**<br>Plug Delphi<br>**2 pin, male** | **ST0601-01**<br>Plug Delphi<br>**2 pin, female** | **13 5626 631**<br>ASS1/ASS2<br>7pin female<br>**ASPÖCK** | **13 5625 981**<br>ASS1/ASS2<br>7pin male<br>**ASPÖCK** | **13 5626 401**<br>ASS1/ASS2<br>2pin female<br>**ASPÖCK** |
| **13 5625 991**<br>ASS1/ASS2<br>2pin male<br>**ASPÖCK** | **13 0521 104**<br>Plug 5pin. female<br>**ASPÖCK** | **13 0536 044**<br>Bayonett connector kit male 5pin. 12V<br>**ASPÖCK** | **13 0828 034**<br>Bayonett connector<br>8pin female black<br>**ASPÖCK** | **13 0838 054**<br>Bayonett connector<br>8pin male black<br>**ASPÖCK** | **13 0322 281**<br>ASS3<br>3pin female<br>**ASPÖCK** | **13 0332 281**<br>ASS3<br>3pin male<br>**ASPÖCK** | **13 1722 001**<br>ASS3<br>17pin female<br>**ASPÖCK** | **13 1732 001**<br>ASS3<br>17pin male<br>**ASPÖCK** | |


**Ing. A.F. Baeder G.m.b.H.**
Kolpingstrasse 13
A-1230 Wien

Tel.: +43 (0)1 865 16 40
Fax.: +43 (0)1 865 16 40 - 34
sales@baeder-automotive.com

**www.baeder-automotive.com**

| | | | | | | | | |
|---|---|---|---|---|---|---|---|---|
| **ST0100-01**<br>Lötverbinder<br>0,8-2,0mm²<br>**Farbcode rot** | **ST0101-01**<br>Lötverbinder<br>2,0-4,0mm²<br>**Farbcode blau** | **ST0102-01**<br>Lötverbinder<br>4.0-6.0mm²<br>**Farbcode gelb** | **ST0103-01**<br>Lötverbinder<br>0,1-0,5mm²<br>**Farbcode weiß/blau** | **ST0200-01**<br>Quetschverbinder<br>0,5-1,5mm²<br>**Farbcode rot** | **ST0201-01**<br>Quetschverbinder<br>1,5-2,5mm²<br>**Farbcode blau** | **ST0202-01**<br>Quetschverbinder<br>3,0-6,0mm²<br>**Farbcode gelb** | | |
| **ST0400-01**<br>Rundsteckhülse<br>Hülse 4 mm Ø<br>Querschnitt 0,5-1,0 mm² | **ST0400-02**<br>Rundstecker<br>4 mm Ø<br>Querschnitt 0,5-1,0 mm² | **ST0401-01**<br>Flachstecker<br>6,3 x 0,8 mm<br>Querschnitt 0,5-1,0 mm² | **ST0401-02**<br>Flachstecker<br>6,3 x 0,8 mm<br>Querschnitt 0,5-1,0 mm² | **ST0401-07**<br>Flachstecker<br>6,3 x 0,8 mm<br>Querschnitt 0,5-1,0 mm² | **ST0401-09**<br>Flachsteckhülse<br>6,3 x 0,8 mm<br>Querschnitt 0,5-1,0 mm² | | | |
| **ST0400-03**<br>Rundsteckhülse<br>Hülse 4 mm Ø<br>Querschnitt 1,5-2,5 mm² | **ST0400-04**<br>Rundstecker<br>4 mm Ø<br>Querschnitt 1,5-2,5 mm² | **ST0401-03**<br>Flachstecker<br>6,3 x 0,8 mm<br>Querschnitt 1,5-2,5 mm² | **ST0401-04**<br>Flachstecker<br>6,3 x 0,8 mm<br>Querschnitt 1,5-2,5 mm² | **ST0401-08**<br>Flachstecker<br>6,3 x 0,8 mm<br>Querschnitt 1,5-2,5 mm² | **ST0401-10**<br>Flachsteckhülse<br>6,3 x 0,8 mm<br>Querschnitt 1,5-2,5 mm² | **ST0402-02**<br>Flachstecker<br>verzinnt mit Rastnase<br>6,3 x 0,8 mm<br>Querschnitt 0,5-1,0 mm² | **ST0402-04**<br>Flachstecker versilbert<br>mit Rastnase<br>6,3 x 0,8 mm<br>Querschnitt 1,5-2,5 mm² | **ST0402-06**<br>Flachstecker<br>verzinnt mit Rastnase<br>6,3 x 0,8 mm<br>Querschnitt 4-6 mm² |
| **ST0400-05**<br>Rundsteckhülse<br>Hülse 5 mm Ø<br>Querschnitt 4-6 mm² | **ST0400-06**<br>Rundstecker<br>5 mm Ø<br>Querschnitt 4-6 mm² | **ST0401-05**<br>Flachstecker<br>6,3 x 0,8 mm<br>Querschnitt 4-6 mm² | **ST0401-06**<br>Flachstecker<br>6,3 x 0,8 mm<br>Querschnitt 4-6 mm² | **ST0402-01**<br>Flachsteckhülse<br>verzinnt mit Rastnase<br>6,3 x 0,8 mm<br>Querschnitt 0,5-1,0 mm² | **ST0402-03**<br>Flachsteckhülse<br>versilbert mit Rastnase<br>6,3 x 0,8 mm<br>Querschnitt 1,5-2,5 mm² | **ST0402-05**<br>Flachsteckhülse<br>mit Rastnase<br>6,3 x 0,8 mm<br>Querschnitt 2,5-6,0 mm² | **ST0402-07**<br>Flachsteckhülse<br>verzinnt<br>Querschnitt 1,5-2,5 mm² | |
| **ST0402-08**<br>Steckverteiler<br>6,3 x 0,8 mm | **ST0403-01**<br>Steckverteiler 3-fach<br>43 mm lang | **ST0403-02**<br>Steckverteiler 4-fach<br>50 mm lang | **ST0403-03**<br>Flachsteckerleiste 4-fach<br>6,3mm U-Form | **ST0403-04**<br>Flachsteckerleiste 6-fach<br>6,3mm U-Form | **ST0403-05**<br>Massestern rund 8pol. | **ST0404-01**<br>Isoliertülle für<br>Flachsteckhülsen<br>6,3 mm<br>Kabelquerschnitt 1,5 mm² | **ST0404-02**<br>Isoliertülle für<br>Flachsteckhülsen<br>6,3 mm<br>Kabelquerschnitt 1,5 mm² | **ST0404-03**<br>2-fach Steckanordnung<br>für Flachsteckhülsen<br>6,3 mm |
| **ST0404-04**<br>2-fach Steckanordnung<br>für Flachstecker<br>6,3 mm | **ST0404-05**<br>3-fach Steckanordnung<br>für Flachsteckhülsen<br>6,3 mm | **ST0404-06**<br>3-fach Steckanordnung<br>für Flachstecker<br>6,3 mm | **ST0404-07**<br>4-fach Steckanordnung<br>für Flachsteckhülsen<br>6,3 mm | **ST0404-08**<br>4-fach Steckanordnung<br>für Flachstecker 6,3 mm | **ST0404-09**<br>6-fach Steckanordnung<br>für Flachsteckhülsen<br>6,3 mm | **ST0404-10**<br>6-fach Steckanordnung<br>für Flachstecker<br>6,3 mm | **ST0404-11**<br>8-fach Steckanordnung<br>für Flachsteckhülsen<br>6,3 mm | **ST0404-12**<br>8-fach Steckanordnung<br>für Flachstecker<br>6,3 mm |
| **ST0405-01**<br>Kabelendhülse isoliert<br>Kabelquerschnitt 0,75 mm² | **ST0405-02**<br>Kabelendhülse isoliert<br>Kabelquerschnitt 1,0 mm² | **ST0405-03**<br>Kabelendhülse isoliert<br>Kabelquerschnitt 1,5 mm² | **ST0405-04**<br>Kabelendhülse isoliert<br>Kabelquerschnitt 2,5 mm² | **ST0406-01**<br>Rundsteckhülse<br>2,1 mm Ø<br>Querschnitt 0,5 - 2,1 mm² | **ST0406-02**<br>Rundsteckhülse<br>2,1 mm Ø<br>Querschnitt 0,5 - 2,1 mm² | **ST0407-01**<br>Superseal<br>Flachsteckhülse<br>Querschnitt 1,0-1,5 mm² | **ST0407-02**<br>Superseal<br>Flachsteckhülse<br>Querschnitt 1,0-1,5 mm² | **ST0408-01**<br>AMP 7-pol. für<br>Heckleuchte<br>Querschnitt 1,0-2,5 mm² |
| **ST0409-01**<br>Flachsteckhülse verzinnt<br>HDSCS<br>Querschnitt 1,0-1,5 mm² | **ST0409-02**<br>Flachsteckhülse verzinnt<br>HDSCS<br>Querschnitt 1,0-2,5 mm² | **ST0410-01**<br>Flachsteckhülse verzinnt<br>JPT<br>Querschnitt 0,5-1,0 mm² | **ST0411-01**<br>Rundstecker verzinnt<br>Querschnitt 0,5-1,0 mm² | **ST0411-02**<br>Rundstecker verzinnt<br>Querschnitt 1,0-2,5 mm² | **ST0412-01**<br>Rundsteckhülse<br>DEUTSCH<br>Querschnitt 0,5-1,5 mm² | **ST0412-02**<br>Rundstecker<br>DEUTSCH<br>Querschnitt 0,5-1,5 mm² | **ST0413-01**<br>Einzel-Leiter-Dichtstopfen<br>DEUTSCH | |
| **ST0414-01**<br>Crimpkontakt<br>15, 13, 7-pol. Stecker<br>Querschnitt 1,5 mm² | **ST0414-02**<br>Crimpkontakt<br>15, 7-pol. Stecker<br>Querschnitt 2,5 mm² | **ST0414-03**<br>Crimpkontakt<br>7-pol. Stecker<br>Querschnitt 4 mm² | **ST0414-04**<br>Crimpkontakt<br>7-pol. Stecker<br>Querschnitt 6 mm² | **ST0415-01**<br>Crimpkontakt<br>15, 13, 7-pol. Stecker<br>Querschnitt 1,5 mm² | **ST0415-02**<br>Crimpkontakt<br>15, 13-pol. Stecker<br>Querschnitt 2,5 mm² | **ST0415-03**<br>Crimpkontakt<br>15, 13, 7-pol. Stecker<br>Querschnitt 4,5 mm² | **ST0415-04**<br>Crimpkontakt<br>7-pol. Stecker<br>Querschnitt 6 mm² | |
| **ST0416-01**<br>Einzelader-Abdichtung<br>Superseal<br>Querschnitt 1,0-1,5 mm² | **ST0416-02**<br>Einzelader-Blindstopfen<br>Superseal | **ST0417-01**<br>Einzelader-Dichtstopfen<br>JPT<br>Querschnitt 0,35-1,0 mm² | **ST0417-02**<br>Einzelader-Dichtstopfen<br>JPT<br>Querschnitt 0,5-1,5 mm² | **ST0417-03**<br>Einzelader-Blindstopfen<br>JPT | **ST0418-01**<br>Einzelader-Dichtstopfen<br>HDSCS ELB 3,6<br>Querschnitt 1,0-1,5 mm² | **ST0419-01**<br>Einzelader-Dichtstopfen<br>HDSCS ELB 5,2<br>Querschnitt 1,0-2,5 mm² | **ST0418-02**<br>Einzelader-Blindstopfen<br>HDSCS ELB 3,6 | **ST0419-02**<br>Einzelader-Blindstopfen<br>HDSCS ELB 5,2 |
| **ST0300-01**<br>Wärmeschrumpfschlauch<br>3:1 4m;<br>D1: 18mm D2: 2,6mm<br>mit Innenkleber | **ST0301-01**<br>Wärmeschrumpfschlauch<br>2:1 5m;<br>D1: 9,5mm D2: 4,76mm<br>mit Innenkleber | **ST0302-01**<br>Wärmeschrumpfschlauch<br>2:1 5m;<br>D1: 12,7mm D2: 6,4mm<br>mit Innenkleber | | | | | | |

**Ing. A.F. Baeder G.m.b.H.**
Kolpingstrasse 13
A-1230 Wien

Tel.: +43 (0)1 865 16 40
Fax.: +43 (0)1 865 16 40 - 34
sales@baeder-automotive.com

**www.baeder-automotive.com**

# Fire extinguisher boxes

**Characteristics:**

- homologation according to ECE R73
- robust thermoplastic bond, UV-resistant
- window made of polycarbonate
- sealed box: IP59K
- door hinge left or right

| FLK0001 |
|---|
| *Fire extinguisher box **max 6kg** red* |
| *plastic belt Dm: 140-195mm* |
| *635 x 282 x 227mm* |

| FLK0002 |
|---|
| *Fire extinguisher box **max 6kg** red* |
| *nylon belt Dm: 140-195mm* |
| *635 x 282 x 227mm* |

| FLK0003 |
|---|
| *Fire extinguisher box **max 9kg** red* |
| *plastic belt Dm: 140-195mm* |
| *786 x 319 x 229mm* |

https://www.baeder-automotive.com

**Ing. A.F. Baeder G.m.b.H.**
1230 Vienna, Kolpingstraße 13
Tel.: +43 (0)1 865 16 40 Fax.: +43 (0)1 865 16 40 - 34
E-Mail: sales@baeder-automotive.com

Printing errors, technical changes and image changes reserved © Ing. A.F. Baeder Ges.m.b.H.

# Plastic pipes

**Plastic pipe PA according to ISO 7628**
**wrapped at 100m (or 500m); available in many colours**

| Item number | Role in m | Diameter | Colour |
|---|---|---|---|
| KR012 6x1 S100 | 100 m | Ø 6 x 1 | Black |
| KR014 6x1 R100 | | | Red |
| KR015 6x1 Y100 | | | Yellow |
| KR016 6x1 G100 | | | Green |
| KR017 6x1 B100 | | | Blue |
| KR022 8x1 S100 | | Ø 8 x 1 | Black |
| KR024 8x1 R100 | | | Red |
| KR025 8x1 Y100 | | | Yellow |
| KR026 8x1 G100 | | | Green |
| KR027 8x1 B100 | | | Blue |
| KR032 10x1 S100 | | Ø 10 x 1 | Black |
| KR034 10 x1 R100 | | | Red |
| KR042 12x1,5 S100 | | Ø 12 x 1,5 | Black |
| KR044 12x1,5 R100 | | | Red |
| KR052 15x1,5 S100 | | Ø 15 x 1,5 | Black |
| KR082 16x2 S100 | | Ø 16 x 2 | Black |

**Plastic pipe PA according to ISO 7628**
**wrapped at 25m each**

| Item number | Role in m | Diameter | Colour |
|---|---|---|---|
| KR011 6x1 S25 | 25 m | Ø 6 x 1 | Black |
| KR021 8x1 S25 | | Ø 8 x 1 | |
| KR031 10x1 S25 | | Ø 10 x 1 | |
| KR041 12x1,5 S25 | | Ø 12 x 1,5 | |
| KR051 15x1,5 S25 | | Ø 15 x 1,5 | |
| KR061 18x2 S25 | | Ø 18 x 2 | |

www.baeder-automotive.com

**Ing. A.F. Baeder Ges.m.b.H.**
1230 Vienna, Kolpingstraße 13
Tel.: +43 (0)1 865 16 40 Fax.: +43 (0)1 865 16 40 - 34
E-Mail: sales@baeder-automotive.com

Printing errors, technical changes and image changes reserved © Ing. A.F. Baeder Ges.m.b.H.

**Plastic pipe PA according to ISO 7628**
**on drum in black**
between 100m and 1000m depending on the dimension

| Item number | Role in m | Diameter | Colour |
|---|---|---|---|
| **KR013 6x1 S1.000** | 1000 m | Ø 6 x 1 | Black |
| **KR023 8x1 S800** | 800 m | Ø 8 x 1 | Black |
| **KR033 10x1 S500** | 500 m | Ø 10 x 1 | Black |
| **KR043 12x1,5 S400** | 400 m | Ø 12 x 1,5 | Black |
| **KR053 15x1,5 S200** | 200 m | Ø 15 x 1,5 | Black |
| **KR063 18x2 S100** | 150 m | Ø 18 x 2 | Black |
| **KR073 10x1,25 S500** | 500 m | Ø 10 x 1,25 | Black |
| **KR074 10x1,25 RG500** | 500 m | Ø 10 x 1,25 | Red |
| **KR075 10x1,25 Y500** | 500 m | Ø 10 x 1,25 | Yellow |

**Features of drum:**

- Disposable wooden drum
- Decent twist-free rolling
- High quality material
- Roll length see above
- Dimensions:
  Diameter: 600 mm
  Width: 300 mm
  Hole: 60 mm

**Plastic pipe PA12 according to DIN 74324**
**wrapped at 100m in black**

| Item number | Role in m | Diameter | Colour |
|---|---|---|---|
| **KR010 6x1 S100PA** | 100 m | Ø 6 x 1 | Black |
| **KR020 8x1 S100PA** | | Ø 8 x 1 | |
| **KR030 10x1 S100PA** | | Ø 10 x 1 | |
| **KR040 12x1,5 S100PA** | | Ø 12 x 1,5 | |
| **KR050 15x1,5 S100PA** | | Ø 15 x 1,5 | |

www.baeder-automotive.com

**Ing. A.F. Baeder Ges.m.b.H.**
1230 Vienna, Kolpingstraße 13
Tel.: +43 (0)1 865 16 40 Fax.: +43 (0)1 865 16 40 - 34
E-Mail: sales@baeder-automotive.com

Printing errors, technical changes and image changes reserved © Ing. A.F. Baeder Ges.m.b.H.

# AIR BRAKE FITTINGS

## Push-In Fittings non-detachable

| Ø | M 12 x 1,5 | M 16 x 1,5 | M 22 x 1,5 |
|---|---|---|---|
| 6 x 1 | 301 0612 5 | 301 0616 2 | 301 0622 2 |
| 8 x 1 | 301 0812 5 | 301 0816 5 | 301 0822 5 |
| 9 x 1,5 | | 301 0916 2 | 301 0922 2 |
| 10 x 1 | 301 1012 5 | 301 1016 5 | 301 1022 5 |
| 10 x 1,25 | 301 0212 2 | 301 0216 5 | 301 0222 2 |
| 11 x 1,5 | | 301 1116 2 | 301 1122 2 |
| 12 x 1,5 | 301 1212 2 | 301 1216 5 | 301 1222 5 |
| 15 x 1,5 | | 301 1516 5 | 301 1522 5 |
| 16 x 2 | | 301 1616 2 | 301 1622 2 |
| 18 x 2 | | | 301 1822 5 |

## Push-In Fittings detachable

| Ø | M 12 x 1,5 | M 16 x 1,5 | M 22 x 1,5 |
|---|---|---|---|
| 6 x 1 | | 301 0616 5. | 301 0622 5. |
| 8 x 1 | 301 0812 5. | 301 0816 5. | 301 0822 5. |
| 12 x 1,5 | | 301 1216 5. | 301 1222 5. |
| 15 x 1,5 | | 301 1516 5. | 301 1522 5. |

## Straight Stud Coupling

| Ø | M 12 x 1,5 | M 16 x 1,5 | M 22 x 1,5 |
|---|---|---|---|
| 6 x 1 | 401 0612 2 | 401 0616 2 | 401 0622 2 |
| 8 x 1 | 401 0812 2 | 401 0816 2 | 401 0822 2 |
| 10 x 1 | 401 1012 2 | 401 1016 2 | 401 1022 2 |
| 12 x 1,5 | 401 1212 2 | | 401 1222 2 |
| 15 x 1,5 | | 401 1517 2 | 101 1522 2 |
| 18 x 2 | | | 101 1822 2 |

## Straight Fitting Push-In

| D1 | D2 | Item number |
|---|---|---|
| 6 x 1 | 6 x 1 | 303 0606 5 |
| 8 x 1 | 6 x 1 | 303 0806 2 |
| 8 x 1 | 8 x 1 | 303 0808 5 |
| 9 x 1,5 | 9 x 1,5 | 303 0909 5 |
| 10 x 1 | 8 x 1 | 303 1008 2 |
| 10 x 1 | 10 x 1 | 303 1010 5 |
| 11 x 1,5 | 11 x 1,5 | 303 1111 2 |
| 12 x 1,5 | 8 x 1 | 303 1208 2 |
| 12 x 1,5 | 10 x 1 | 303 1210 2 |
| 12 x 1,5 | 12 x 1,5 | 303 1212 5 |
| 15 x 1,5 | 15 x 1,5 | 303 1515 5 |
| 16 x 2 | 16 x 2 | 303 1616 2 |
| 18 x 2 | 18 x 2 | 303 1818 2 |

## Straight Fitting

| D1 | D2 | Item number |
|---|---|---|
| 6 x 1 | 6 x 1 | 403 0606 2 |
| 8 x 1 | 6 x 1 | 103 0806 2 |
| 8 x 1 | 8 x 1 | 103 0808 2 |
| 10 x 1 | 6 x 1 | 103 1006 2 |
| 10 x 1 | 8 x 1 | 103 1008 2 |
| 10 x 1 | 10 x 1 | 103 1010 2 |
| 12 x 1,5 | 6 x 1 | 103 1206 2 |
| 12 x 1,5 | 8 x 1 | 103 1208 2 |
| 12 x 1,5 | 10 x 1 | 103 1210 2 |
| 12 x 1,5 | 12 x 1,5 | 103 1212 2 |
| 15 x 1,5 | 10 x 1 | 103 1510 2 |
| 15 x 1,5 | 12 x 1,5 | 103 1512 2 |
| 15 x 1,5 | 15 x 1,5 | 103 1515 2 |
| 18 x 2 | 15 x 1,5 | 103 1815 2 |
| 18 x 2 | 18 x 2 | 103 1818 2 |

## Stud Elbow Coupling

| Ø | M 16 x 1,5 | M 22 x 1,5 |
|---|---|---|
| 8 x 1 | 405 0816 2 | 405 0822 2 |
| 10 x 1 | 405 1016 2 | 405 1022 2 |
| 12 x 1,5 | 405 1216 2 | 405 1222 2 |
| 15 x 1,5 | 405 1516 2 | 405 1522 2 |
| 18 x 2 | | 405 1822 2 |

Subject to technical changes and misprints. © Ing. A.F. Baeder Ges.m.b.H.

## Stud Elbow Coupling Push-In

| Ø | M 12 x 1,5 | M 16 x 1,5 | M 22 x 1,5 |
|---|---|---|---|
| 6 x 1 | 305 0612 2 | 305 0616 2 | 305 0622 2 |
| 8 x 1 | 305 0812 2 | 305 0816 2 | 305 0822 2 |
| 10 x 1 | 305 1012 2 | 305 1016 2 | 305 1022 2 |
| 10 x 1,25 | 305 0212 2 | 305 0216 2 | 305 0222 2 |
| 12 x 1,5 | | 305 1216 2 | 305 1222 2 |
| 15 x 1,5 | | 305 1516 2 | 305 1522 2 |
| 18 x 2 | | | 305 1822 2 |

## Bulkhead Elbow Couplings

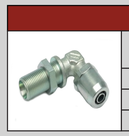

| Ø | Thread | Item number |
|---|---|---|
| R12 x 1,5 | M16 x 1,5 (R10 x 1) | 316 1290 2 |
| R12 x 1,5 | M18 x 1,5 (R12 x 1,5) | 316 1296 2 |
| R15 x 1,5 | M22 x 1,5 (R15 x 1,5) | 316 1596 2 |

## Hosetails

| Thread | S 11 | S13 |
|---|---|---|
| M16 x 1,5 without o-ring | 950 1116 2 | 950 1316 2 |
| M16 x 1,5 with o-ring | 850 1116 5. | 850 1316 5. |
| M22 x 1,5 without o-ring | 950 1122 2 | 950 1322 2 |
| M22 x 1,5 with o-ring | 850 1122 5. | 850 1322 5. |

## Hosetails pre-assembled

| Ø | Thread | S 11 | S 13 |
|---|---|---|---|
| R12 x 1,5 | | 952 1112 2 | |
| R10 x 1 | M16 x 1,5 | 452 1110 2 | |
| R12 x 1,5 | M18 x 1,5 | 452 1112 2 | 452 1312 2 |
| R15 x 1,5 | M22 x 1,5 | 452 1115 2 | 452 1315 2 |

## Hosetail Connectors

| Ø | S 11 | S 13 |
|---|---|---|
| R10 x 1 | 351 1110 2 | |
| R12 x 1,5 | 351 1112 2 | 351 1312 2 |
| R15 x 1,5 | 351 1115 2 | 351 1315 2 |

## Reducer (with O-Ring)

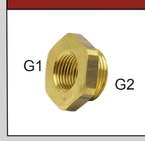


| G1 | G2 | Item number |
|---|---|---|
| M12 x 1,5 | M16 x 1,5 | 361 1612 5. |
| M12 x 1,5 | M22 x 1,5 | 361 2212 5. |
| M14 x 1,5 | M22 x 1,5 | 361 2214 2 |
| M16 x 1,5 | M22 x 1,5 | 361 2216 5. |

## Sleeve

| Thread | Item number |
|---|---|
| M12 x 1,5 | 460 1225 2 |
| M14 x 1,5 | 460 1425 2 |
| M16 x 1,5 | 460 1625 2 |
| M18 x 1,5 | 460 1825 2 |
| M22 x 1,5 short 25mm | 460 2225 2 |
| M22 x 1,5 long 38mm | 460 2238 2 |

## Blanking Plug (with O-Ring)

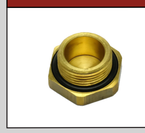

| Thread | Item number |
|---|---|
| M12 x 1,5 | 362 0012 5. |
| M16 x 1,5 | 362 0016 5. |
| M22 x 1,5 | 362 0022 5. |

## Blanking Plug (without O-Ring)

| Thread | Item number |
|---|---|
| M10 x 1 | 462 0010 2 |
| M12 x 1,5 | 462 0012 2 |
| M14 x 1,5 | 462 0014 2 |
| M16 x 1,5 | 462 0016 2 |
| M22 x 1,5 | 462 0022 2 |
| M22 x 1,5 | 462 0522 2 |

## Test Points

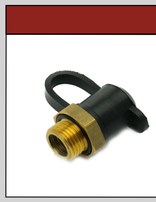

| Ø | Item no. |
|---|---|
| 12 x 1,5 without o-ring | 465 1112 2 |
| 16 x 1,5 with o-ring | 365 0916 5. |
| 16 x 1,5 without o-ring | 465 0916 5 |
| 22 x 1,5 with o-ring | 365 0922 5. |
| 22 x 1,5 without o-ring | 465 0922 5 |

## Drain valve

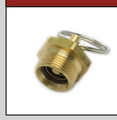

| Description | M 22 x 1,5 |
|---|---|
| with ring, with o-ring | 366 1122 5 |
| without ring, with o-ring | 366 1222 5. |
| with ring, without o-ring | 466 1122 5 |

## Hexagon Nut

| Thread | Item Number |
|---|---|
| M12 x 1,5 | 1D064 |
| M14 x 1,5 | 677 0014 2 |
| M16 x 1,5 | 677 0016 2 |
| M18 x 1,5 | 677 0018 2 |
| M22 x 1,5 | 977 0022 2 |
| M26 x 1,5 | 977 0026 2 |

## Push-In Unit

| Ø | M 14 x 1,5 | M 16 x 1,5 | M 18 x 1,5 | M 22 x 1,5 |
|---|---|---|---|---|
| 8 x 1 | 370 0810 5 | | 370 2810 5 | |
| 9 x 1,5 | | 370 0915 5 | | |
| 10 x 1 | | 370 1010 5 | 370 2010 5 | |
| 10 x 1,25 | | 370 1012 5 | | |
| 10 x 1,5 | | 370 1015 5 | | |
| 11 x 1,5 | | | 370 1115 5 | |
| 12 x 1,5 | | | 370 1215 5 | |
| 15 x 1,5 | | | | 370 1515 5 |
| 15 x 2 | | | | 370 1520 5 |
| 16 x 2 | | | | 370 1620 5 |

## Coupling Nut & Compression Ring

| Item no. | Thread | Ø | Item no. |
|---|---|---|---|
| 670 0006 2 | M12 x 1,5 | 6 x 1 | 671 0006 2 |
| 670 0008 2 | M14 x 1,5 | 8 x 1 | 671 0008 2 |
| 670 0010 2 | M16 x 1,5 | 10 x 1 | 671 0010 2 |
| 670 0012 2 | M18 x 1,5 | 12 x 1,5 | 671 0012 2 |
| 670 0015 2 | M22 x 1,5 | 15 x 1,5 | 671 0015 2 |
| 670 0018 2 | M26 x 1,5 | 18 x 2 | 671 0018 2 |

## O-Ring & Pressure Ring

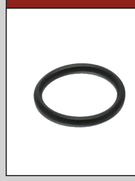

| Item no. | for thread | Item no. |
|---|---|---|
| 979 0012 9 | M12 x 1,5 | 978 0012 5 |
| 979 0014 9 | M14 x 1,5 | 978 0014 5 |
| 979 0016 9 | M16 x 1,5 | 978 0016 5 |
| 979 0018 9 | M18 x 1,5 | 978 0018 5 |
| 979 0022 9 | M22 x 1,5 | 978 0022 5 |
| 979 0026 9 | M26 x 1,5 | 978 0026 5 |

## Tubular Stiffener

| Ø | Ø for tube | Item no. |
|---|---|---|
| 4 mm | 6 x 1 | 982 0610 5 |
| 6 mm | 8 x 1 | 982 0810 5 |
| 7 mm | 10 x 1,5 | 982 1015 5 |
| 8 mm | 10 x 1 | 982 1010 5 |
| 9 mm | 12 x 1,5 | 982 1215 5 |
| 12 mm | 15 x 1,5 | 982 1515 5 |
| 14 mm | 18 x 2 | 982 1820 5 |

## Pipe Clamp

| Ø | Item no. |
|---|---|
| 6 mm | 487 0006 2 |
| 8 mm | 487 0008 2 |
| 10 mm | 487 0010 2 |
| 12 mm | 487 0012 2 |
| 15 mm | 487 0015 2 |
| 18 mm | 487 0018 2 |

## Hose Clamp

| Ø | Item no. |
|---|---|
| 18mm (S11) | 488 1812 2 |
| 25mm (S13) | 488 2515 2 |

## Stud Elbow Couplings

| G1 | G2 | Item no. |
|---|---|---|
| M12 x 1,5 | M16 x 1,5 | 805 1215 5. |
| M16 x 1,5 | M16 x 1,5 | 805 1615 5. |
| M16 x 1,5 | M22 x 1,5 | 805 2215 5. |
| M22 x 1,5 | M22 x 1,5 | 805 2221 5. |

## Barrel Tees

| G1 | G2 | Item no. |
|---|---|---|
| M12 x 1,5 | M12 x 1,5 | 808 1211 5. |
| M12 x 1,5 | M16 x 1,5 | 808 1611 5. |
| M16 x 1,5 | M16 x 1,5 | 808 1615 5. |
| M16 x 1,5 | M22 x 1,5 | 808 2215 5. |

## Branch Tees

| G1 | G2 | Item no. |
|---|---|---|
| M16 x 1,5 | M16 x 1,5 | 810 1615 5. |
| M16 x 1,5 | M22 x 1,5 | 810 2215 5. |

## Barrel Tee Couplings

| Thread | Item no. |
|---|---|
| M16 x 1,5 | 308 1615 5. |
| M22 x 1,5 | 308 2221 5. |

## Double Connectors

| G1 | G2 | G3 | Item no. |
|---|---|---|---|
| M16 x 1,5 | M16 x 1,5 | M22 x 1,5 | 314 9616 5 |
| M16 x 1,5 | M22 x 1,5 | M22 x 1,5 | 314 9622 5 |

**The complete range of our air brake fittings you will find at our online shop:**

**www.baeder-automotive.com**

Ing. A.F. Baeder Ges.m.b.H.
Kolpingstraße 13
A-1230 Vienna

Tel.: +43 (0)1 865 16 40
Fax: +43 (0)1 869 16 40 - 34
E-Mail: sales@baeder-automotive.com

# RELEASABLE FITTINGS

## Straight stud couplings

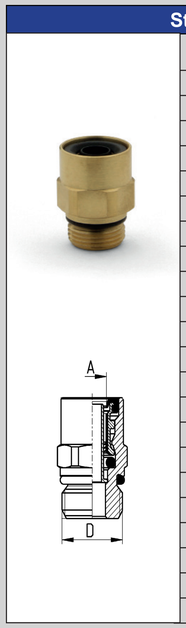


| D | A | Art.-No. |
|---|---|---|
| M10 x 1,5 | 6 x 1 | VSC1124 9512 |
| M12 x 1,5 | 6 x 1 | VSC1125 9512 |
| M14 x 1,5 | 6 x 1 | VSC1126 9512 |
| M16 x 1,5 | 6 x 1 | VSC1123 9512 |
| M22 x 1,5 | 6 x 1 | VSC1127 9512 |
| M10 x 1 | 8 x 1 | VSC1129 9512 |
| M12 x 1,5 | 8 x 1 | VSC1130 9512 |
| M14 x 1,5 | 8 x 1 | VSC1132 9512 |
| M16 x 1,5 | 8 x 1 | VSC1128 9512 |
| M22 x 1,5 | 8 x 1 | VSC1131 9512 |
| M12 x 1,5 | 10 x 1 | VSC1135 9512 |
| M16 x 1,5 | 10 x 1 | VSC1133 9512 |
| M22 x 1,5 | 10 x 1 | VSC1138 9512 |
| M12 x 1,5 | 12 x 1,5 | VSC1141 9512 |
| M14 x 1,5 | 12 x 1,5 | VSC1143 9512 |
| M16 x 1,5 | 12 x 1,5 | VSC1140 9512 |
| M22 x 1,5 | 12 x 1,5 | VSC1142 9512 |
| M16 x 1,5 | 15 x 1,5 | VSC1145 9512 |
| M22 x 1,5 | 15 x 1,5 | VSC1147 9512 |
| M16 x 1,5 | 16 x 2 | VSC1148 9512 |
| M22 x 1,5 | 16 x 2 | VSC1150 9512 |
| M22 x 1,5 | 18 x 2 | VSC1151 9512 |

## Stud elbow couplings

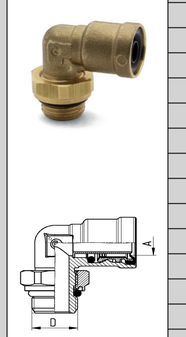


| D | A | Art.-No. |
|---|---|---|
| M10 x 1,5 | 6 x 1 | VSC1098 9502 |
| M12 x 1,5 | 6 x 1 | VSC1099 9502 |
| M16 x 1,5 | 6 x 1 | VSC1097 9502 |
| M22 x 1,5 | 6 x 1 | VSC1100 9502 |
| M12 x 1,5 | 8 x 1 | VSC1103 9502 |
| M14 x 1,5 | 8 x 1 | VSC1105 9502 |
| M16 x 1,5 | 8 x 1 | VSC1101 9502 |
| M22 x 1,5 | 8 x 1 | VSC1104 9502 |
| M12 x 1,5 | 10 x 1 | VSC1109 9502 |
| M16 x 1,5 | 10 x 1 | VSC1107 9502 |
| M22 x 1,5 | 10 x 1 | VSC1111 9502 |
| M12 x 1,5 | 12 x 1,5 | VSC1114 9502 |
| M16 x 1,5 | 12 x 1,5 | VSC1113 9502 |
| M22 x 1,5 | 12 x 1,5 | VSC1115 9502 |
| M16 x 1,5 | 15 x 1,5 | VSC1117 9502 |
| M22 x 1,5 | 15 x 1,5 | VSC1118 9502 |
| M22 x 1,5 | 16 x 2 | VSC1121 9502 |
| M22 x 1,5 | 18 x 2 | VSC1122 9502 |

## Barrel tee couplings

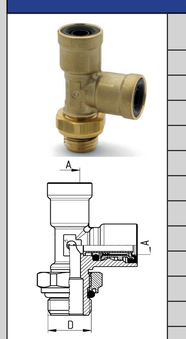


| D | A | Art.-No. |
|---|---|---|
| M16 x 1,5 | 6 x 1 | VSC1074 9422 |
| M10 x 1 | 6 x 1 | VSC1075 9422 |
| M12 x 1,5 | 6 x 1 | VSC1076 9422 |
| M16 x 1,5 | 8 x 1 | VSC1077 9422 |
| M12 x 1,5 | 8 x 1 | VSC1078 9422 |
| M22 x 1,5 | 8 x 1 | VSC1079 9422 |
| M16 x 1,5 | 10 x 1 | VSC1080 9422 |
| M22 x 1,5 | 10 x 1 | VSC1081 9422 |
| M16 x 1,5 | 12 x 1,5 | VSC1082 9422 |
| M22 x 1,5 | 12 x 1,5 | VSC1084 9422 |
| M16 x 1,5 | 15 x 1,5 | VSC1085 9422 |
| M22 x 1,5 | 15 x 1,5 | VSC1072 9422 |

## Branch tee couplings

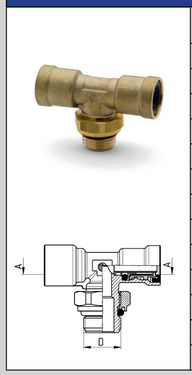


| D | A | Art.-No. |
|---|---|---|
| M16 x 1,5 | 6 x 1 | VSC1054 9412 |
| M12 x 1,5 | 6 x 1 | VSC1056 9412 |
| M22 x 1,5 | 6 x 1 | VSC1057 9412 |
| M16 x 1,5 | 8 x 1 | VSC1058 9412 |
| M12 x 1,5 | 8 x 1 | VSC1059 9412 |
| M22 x 1,5 | 8 x 1 | VSC1060 9412 |
| M16 x 1,5 | 10 x 1 | VSC1062 9412 |
| M12 x 1,5 | 10 x 1 | VSC1064 9412 |
| M22 x 1,5 | 10 x 1 | VSC1066 9412 |
| M16 x 1,5 | 12 x 1,5 | VSC1067 9412 |
| M22 x 1,5 | 12 x 1,5 | VSC1069 9412 |
| M16 x 1,5 | 15 x 1,5 | VSC1070 9412 |
| M22 x 1,5 | 15 x 1,5 | VSC1072 9412 |

## F screw connections

| D | A | Art.-No. |
|---|---|---|
| M16 x 1,5 | 12x1,5 | VSC1052 9402 |
| M22 x 1,5 | 12x1,5 | VSC1053 9402 |

## Y screw connections

| D | A | Art.No. |
|---|---|---|
| M16 x 1,5 | 8 x 1 | VSC1092 9450 |
| M16 x 1,5 | 12 x 1,5 | VSC1093 9450 |
| M22 x 1,5 | 12 x 1,5 | VSC1094 9450 |

## Cross screws

| D | d | Art.-No. |
|---|---|---|
| M16 x 1,5 | M16 x 1,5 | VSC1013 D2032 |
| M22 x 1,5 | M16 x 1,5 | VSC1012 D2032 |

## Bulkhead connectors

| A | B | D | Art.-No. |
|---|---|---|---|
| 8 x 1 | 8 x 1 | 18 x 1,5 | VSC1178 9592 |
| 12 x 1,5 | 8 x 1 | 18 x 1,5 | VSC1179 9592 |

## Double connectors

| G1 | G2 | G3 | Art.-No. |
|---|---|---|---|
| M16 x 1,5 | M16 x 1,5 | M22 x 1,5 | 314 9616 5 |
| M16 x 1,5 | M22 x 1,5 | M22 x 1,5 | 314 9622 5 |

## Barrel tees

| G1 | G2 | Art.-No. |
|---|---|---|
| M12 x 1,5 | M12 x 1,5 | 808 1211 5. |
| M12 x 1,5 | M16 x 1,5 | 808 1611 5. |
| M16 x 1,5 | M16 x 1,5 | 808 1615 5. |
| M16 x 1,5 | M22 x 1,5 | 808 2215 5. |
| M22 x 1,5 | M22 x 1,5 | 808 2221 5. |

## T screw-in sockets

| M1 | M2 | Art.-No. |
|---|---|---|
| M16 x 1,5 | M12 x 1,5 | 810 1215 5. |
| M16 x 1,5 | M16 x 1,5 | 810 1615 5. |
| M16 x 1,5 | M22 x 1,5 | 810 2215 5. |

## Corner screw-in sockets

| D | d | Art.-No. |
|---|---|---|
| M16 x 1,5 | M16 x 1,5 | VSC1022 D2077 |
| M22 x 1,5 | M16 x 1,5 | VSC1023 D2077 |

## Elbow screw-in sockets

| G1 | G2 | Art.-No. |
|---|---|---|
| M12 x 1,5 | M16 x 1,5 | 805 1215 5. |
| M16 x 1,5 | M16 x 1,5 | 805 1615 5. |
| M16 x 1,5 | M22 x 1,5 | 805 2215 5. |
| M22 x 1,5 | M22 x 1,5 | 805 2221 5. |

## Straight connectors

| A | Art.-No. |
|---|---|
| 6 x 1 | VSC1163 9580 |
| 8 x 1 | VSC1164 9580 |
| 10 x 1 | VSC1165 9580 |
| 12 x 1,5 | VSC1168 9580 |
| 15 x 1,5 | VSC1171 9580 |
| 16 x 2 | VSC1172 9580 |
| 18 x 2 | VSC1173 9580 |

## Branch Tee Couplings

| A | A1 | Art.-No. |
|---|---|---|
| 6 x 1 | 6 x 1 | VSC1155 9540 |
| 8 x 1 | 8 x 1 | VSC1156 9540 |
| 10 x 1 | 10 x 1 | VSC1158 9540 |
| 12 x 1,5 | 12 x 1,5 | VSC1159 9540 |

## Barrel tee couplings

| Thread | Art.-No. |
|---|---|
| M16 x 1,5 | 308 1615 5. |
| M22 x 1,5 | 308 2221 5. |

## Plug-in units C-Truck

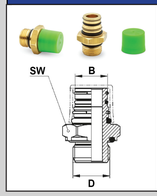


| B | D | Remark | Art.-No. |
|---|---|---|---|
| C1 | M16 x 1,5 | SW17 | VSC1042 D2912 |
| C1 | M16 x 1,5 | SW22 | VSC1043 D2912 |
| C1 | M10 x 1 | | VSC1045 D2912 |
| C1 | M12 x 1,5 | | VSC1046 D2912 |
| C1 | M22 x 1,5 | | VSC1047 D2912 |
| C1 | M14 x 1,5 | | VSC1049 D2912 |

## Elbow screw C-Truck

| d | A | B | Art.-No. |
|---|---|---|---|
| M16 x 1,5 | | C1 | VSC1024 D2220 |
| M12 x 1,5 | | C1 | VSC1025 D2220 |
| | 6 x 1 | C1 | VSC1185 9520 |
| | 8 x 1 | C1 | VSC1152 9520 |
| | 10 x 1 | C1 | VSC1184 9520 |
| | 12 x 1,5 | C1 | VSC1153 9520 |
| | 15 x 1,5 | C1 | VSC1154 9520 |

## L-piece C-Truck

| d | A | B | Art.-No. |
|---|---|---|---|
| M16 x 1,5 | | C1 | VSC1028 D2270 |
| M12 x 1,5 | | C1 | VSC1029 D2270 |
| | 6 x 1 | C1 | VSC1187 9440 |
| | 8 x 1 | C1 | VSC1089 9440 |
| | 10 x 1 | C1 | VSC1182 9440 |
| | 12 x 1,5 | C1 | VSC1090 9440 |
| | 15 x 1,5 | C1 | VSC1091 9440 |

## Tee C-Truck

| d | A | B | Art.-No. |
|---|---|---|---|
| M16 x 1,5 | | C1 | VSC1026 D2260 |
| M12 x 1,5 | | C1 | VSC1027 D2260 |
| | 6 x 1 | C1 | VSC1186 9430 |
| | 8 x 1 | C1 | VSC1086 9430 |
| | 10 x 1 | C1 | VSC1183 9430 |
| | 12 x 1,5 | C1 | VSC1087 9430 |
| | 15 x 1,5 | C1 | VSC1088 9430 |

## Thread Adaptors

| G1 | G2 | Art.No. |
|---|---|---|
| M12 x 1,5 | M16 x 1,5 | 361 1612 5. |
| M12 x 1,5 | M22 x 1,5 | 361 2212 5. |
| M14 x 1,5 | M22 x 1,5 | 361 2214 2 |
| M16 x 1,5 | M22 x 1,5 | 361 2216 5. |

## Lock screw

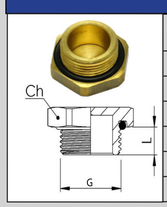


| Gewinde | Art.-No. |
|---|---|
| M10 x 1 | 362 0010 2 |
| M12 x 1,5 | 362 0012 5. |
| M14 x 1,5 | 462 0014 2 |
| M16 x 1,5 | 362 0016 5. |
| M22 x 1,5 | 362 0022 5. |
| M22 x 1,5 | 462 0522 2 |

Picture: 462 0522 2

## Screw-in test port

| Ø | Art.-No. |
|---|---|
| 16 x 1,5 with seal | 365 0916 5. |
| 22 x 1,5 with seal | 365 0922 5. |

## Drain valve

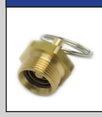

| Description M 22 x 1,5 | Art.-No. |
|---|---|
| with ring, with seal | 366 1122 5 |
| without ring, with seal | 366 1222 5. |
| with ring, without seal | 466 1122 5 |

## Anti-rotation ring

| Remark | Art.-No. |
|---|---|
| SW 22 | VSC1180 9707 |
| SW 24 | VSC1181 9707 |

## Pipe release tool

| Description | Art.-No. |
|---|---|
| Pipe release tool 6 | VSC1001 DRK6 |
| Pipe release tool 8 | VSC1002 DRK8 |
| Pipe release tool 10 | VSC1003 DRK10 |
| Pipe release tool 12 | VSC1004 DRK12 |
| Pipe release tool 15 | VSC1005 DRK15 |
| Pipe release tool 16 | VSC1006 DRK16 |
| Pipe release tool 18 | VSC1007 DRK18 |


Ing. A.F. Baeder Ges.m.b.H.
Kolpingstrasse 13
A-1230 Vienna

Tel.: +43 (0)1 865 16 40
Fax: +43 (0)1 865 16 40 - 34
E-Mail: sales@baeder-automotive.com


**The entire range and further information can be found at: www.baeder-automotive.com**

Subject to misprints, technical changes and changes to images. © Ing.A.F. Baeder Ges.m.b.H.

www.baeder-automotive.com

Ing. A.F. Baeder Ges.m.b.H.
Kolpingstraße 13
A-1230 Vienna
Tel: +43 (0)1/865 16 40
Fax:+43 (0)1/865 16 40 - 34
sales@baeder-automotive.com

www.baeder-automotive.com

# AF BAEDER

ASPÖCK SYSTEMS · FABRILcar® Your partner for alternative components powered by ASPÖCK · FTE automotive a Valeo brand · FREMAX CARBON+ · VBG · RINGFEDER

ORLACO Specialised Camera Solutions · ONSPOT · VIGNAL LIGHTING GROUP · Truck-Lite · ULO eine Marke der odelo-Gruppe · NK THE RELIABLE PART · LUIS TECHNOLOGY · ZEPRO

Ing. A.F. Baeder Ges.m.b.H. • Kolpingstraße 13 • 1230 Wien
sales@baeder-automotive.com • Tel: +43 (0)1/865 16 40 • Fax: +43 (0)1/865 16 40 - 34